Site Plans

Issued for: **Permitting**

Date Issued: July 1, 2013

Latest Issue: July 1, 2013

Sheet Index

Number	Drawing Title	Latest Issue
C-1	Legend and General Notes	7/1/2013
C-2	Overall Context Plan	7/1/2013
C-3	Layout and Materials Plan	7/1/2013
C-4	Grading, Drainage, and Erosion Control Plan	7/1/2013
C-5	Utility Plan	7/1/2013
C-6	Site Details 1	7/1/2013
C-7	Site Details 2	7/1/2013
C-8	Site Details 3	7/1/2013
C-9	Site Details 4	7/1/2013
L-1	Planting Plan	7/1/2013

Reference Drawings

Number	Drawing Title	Latest Issue
	Site Plan Tisbury, Ma.	3/14/2013

Proposed Stop & Shop Store #0423

Water Street
Tisbury, Massachusetts

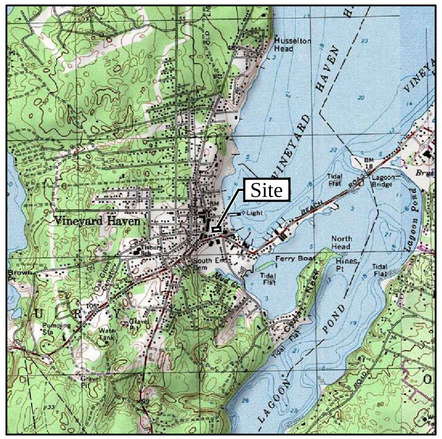

Site Location Map

Property Owners

Owners:
Town of Tisbury
32 Water Street
Tisbury, Ma. 02568

Stop & Shop
1385 Hancock Street
Quincy, Ma. 02169

Applicant:
Stop & Shop Supermarket Companies
1385 Hancock Street
Quincy, Ma. 02169

Assessor's Plat: 7 Block E
Lots: 5, 6, 7 & 8

Vanasse Hangen Brustlin, Inc.
Transportation
Land Development
Environmental Services

10 Dorrance Street, Suite 400
Providence, Rhode Island 02903
401.272.8100 • FAX 401.273.9694

VHB Project No. 72451.00
Water Street, Tisbury, Massachusetts
Issued for: Permitting

J:\72451.00\CAD\LD\PLANSET\72451-COV 3 December 2006

Saved Friday, June 28, 2013 12:01:16 PM GBURKE Plotted Friday, June 28, 2013 12:02:12 PM Burke, Genevieve

Legend

Exist.	Prop.	
		PROPERTY LINE
		PROJECT LIMIT LINE
		RIGHT-OF-WAY/PROPERTY LINE
		EASEMENT
		BUILDING SETBACK
		PARKING SETBACK
10+00	10+00	BASELINE
		CONSTRUCTION LAYOUT
		ZONING LINE
		TOWN LINE
		LIMIT OF DISTURBANCE
		WETLAND LINE WITH FLAG
		FLOODPLAIN
BLSF		BORDERING LAND SUBJECT TO FLOODING
BZ		WETLAND BUFFER ZONE
NDZ		NO DISTURB ZONE
200'RA		200' RIVERFRONT AREA
		GRAVEL ROAD
EOP		EDGE OF PAVEMENT
BB	BB	BITUMINOUS BERM
BC	BC	BITUMINOUS CURB
CC	CC	CONCRETE CURB
CG	CG	CURB AND GUTTER
ECC	ECC	EXTRUDED CONCRETE CURB
MCC	MCC	MONOLITHIC CONCRETE CURB
PCC	PCC	PRECAST CONC. CURB
SGE	SGE	SLOPED GRAN. EDGING
VGC	VGC	VERT. GRAN. CURB
		LIMIT OF CURB TYPE
		SAWCUT
		BUILDING
	EN	BUILDING ENTRANCE
	LD	LOADING DOCK
		BOLLARD
D	D	DUMPSTER PAD
		SIGN
		DOUBLE SIGN
		STEEL GUARDRAIL
		WOOD GUARDRAIL
		PATH
		TREE LINE
		WIRE FENCE
		FENCE
		STOCKADE FENCE
		STONE WALL
		RETAINING WALL
		STREAM / POND / WATER COURSE
		DETENTION BASIN
		HAY BALES
		SILT FENCE
4	4	MINOR CONTOUR
20	20	MAJOR CONTOUR
10	10	PARKING COUNT
	C10	COMPACT PARKING STALLS
DYL	DYL	DOUBLE YELLOW LINE
SL	SL	STOP LINE
		CROSSWALK
		ACCESSIBLE CURB RAMP
		ACCESSIBLE PARKING
VAN	VAN	VAN-ACCESSIBLE PARKING

Exist.	Prop.	
		CONCRETE
		HEAVY DUTY PAVEMENT
		RIPRAP
		CONSTRUCTION ENTRANCE
27.35 TC×	27.35 TC×	TOP OF CURB ELEVATION
26.85 BC×	26.85 BC×	BOTTOM OF CURB ELEVATION
132.75 ×	132.75 ×	SPOT ELEVATION
45.0 TW× 38.5 BW	45.0 TW× 38.5 BW	TOP & BOTTOM OF WALL ELEVATION
		BORING LOCATION
		TEST PIT LOCATION
MW	MW	MONITORING WELL
UD	UD	UNDERDRAIN
12"D	12"D	DRAIN
6"RD	6"RD	ROOF DRAIN
12"S	12"S	SEWER
FM	FM	FORCE MAIN
OHW	OHW	OVERHEAD WIRE
6"W	6"W	WATER
4"FP	4"FP	FIRE PROTECTION
	2"DW	DOMESTIC WATER
3"G	G	GAS
E	E	ELECTRIC
STM	STM	STEAM
T	T	TELEPHONE
FA	FA	FIRE ALARM
CATV	CATV	CABLE TV
		CATCH BASIN
		DOUBLE CATCH BASIN
		GUTTER INLET
		DRAIN MANHOLE
TD		TRENCH DRAIN
E	E	PLUG OR CAP
CO	CO	CLEANOUT
		FLARED END SECTION
		HEADWALL
S		SEWER MANHOLE
GS	GS	CURB STOP & BOX
WV	WV	WATER VALVE & BOX
TSV	TSV	TAPPING SLEEVE, VALVE & BOX
		SIAMESE CONNECTION
HYD	HYD	FIRE HYDRANT
WM	WM	WATER METER
PIV	PIV	POST INDICATOR VALVE
W	W	WATER WELL
GG	GG	GAS GATE
GM	GM	GAS METER
E	EMH	ELECTRIC MANHOLE
EM	EM	ELECTRIC METER
		LIGHT POLE
T	TMH	TELEPHONE MANHOLE
T	T	TRANSFORMER PAD
		UTILITY POLE
		GUY POLE
		GUY WIRE & ANCHOR
HH	HH	HAND HOLE
PB	PB	PULL BOX
Matchline		MATCHLINE

Abbreviations

General

ABAN	ABANDON
ACR	ACCESSIBLE CURB RAMP
ADJ	ADJUST
APPROX	APPROXIMATE
BIT	BITUMINOUS
BS	BOTTOM OF SLOPE
BWLL	BROKEN WHITE LANE LINE
CONC	CONCRETE
DYCL	DOUBLE YELLOW CENTER LINE
EL	ELEVATION
ELEV	ELEVATION
EXIST	EXISTING
FDN	FOUNDATION
FFE	FIRST FLOOR ELEVATION
GRAN	GRANITE
GTD	GRADE TO DRAIN
LA	LANDSCAPE AREA
LOD	LIMIT OF DISTURBANCE
MAX	MAXIMUM
MIN	MINIMUM
NIC	NOT IN CONTRACT
NTS	NOT TO SCALE
PERF	PERFORATED
PROP	PROPOSED
REM	REMOVE
RET	RETAIN
R&D	REMOVE AND DISPOSE
R&R	REMOVE AND RESET
SWEL	SOLID WHITE EDGE LINE
SWLL	SOLID WHITE LANE LINE
TS	TOP OF SLOPE
TYP	TYPICAL

Utility

CB	CATCH BASIN
CMP	CORRUGATED METAL PIPE
CO	CLEANOUT
DCB	DOUBLE CATCH BASIN
DMH	DRAIN MANHOLE
CIP	CAST IRON PIPE
COND	CONDUIT
DIP	DUCTILE IRON PIPE
FES	FLARED END SECTION
FM	FORCE MAIN
F&G	FRAME AND GRATE
F&C	FRAME AND COVER
GI	GUTTER INLET
GT	GREASE TRAP
HDPE	HIGH DENSITY POLYETHYLENE PIPE
HH	HANDHOLE
HW	HEADWALL
HYD	HYDRANT
INV	INVERT ELEVATION
I=	INVERT ELEVATION
LP	LIGHT POLE
MES	METAL END SECTION
PWW	PAVED WATER WAY
PVC	POLYVINYLCHLORIDE PIPE
PIV	POST INDICATOR VALVE
RCP	REINFORCED CONCRETE PIPE
R=	RIM ELEVATION
SMH	SEWER MANHOLE
TSV	TAPPING SLEEVE, VALVE AND BOX
UG	UNDERGROUND
UP	UTILITY POLE

Notes:

General

1. CONTRACTOR SHALL NOTIFY "DIG-SAFE" (1-888-344-7233) AT LEAST 72 HOURS BEFORE EXCAVATING.
2. CONTRACTOR SHALL BE RESPONSIBLE FOR SITE SECURITY AND JOB SAFETY. CONSTRUCTION ACTIVITIES SHALL BE IN ACCORDANCE WITH OSHA STANDARDS AND LOCAL REQUIREMENTS.
3. ACCESSIBLE ROUTES, PARKING SPACES, RAMPS, SIDEWALKS AND WALKWAYS SHALL BE CONSTRUCTED IN CONFORMANCE WITH THE FEDERAL AMERICANS WITH DISABILITIES ACT AND WITH STATE AND LOCAL LAWS AND REGULATIONS (WHICHEVER ARE MORE STRINGENT).
4. AREAS DISTURBED DURING CONSTRUCTION AND NOT RESTORED WITH IMPERVIOUS SURFACES (BUILDINGS, PAVEMENTS, WALKS, ETC.) SHALL RECEIVE 6" INCHES LOAM AND SEED.
5. WITHIN THE LIMITS OF THE BUILDING FOOTPRINT, THE SITE CONTRACTOR SHALL PERFORM EARTHWORK OPERATIONS REQUIRED UP TO SUBGRADE ELEVATIONS.
6. WORK WITHIN THE LOCAL RIGHTS-OF-WAY SHALL CONFORM TO LOCAL MUNICIPAL STANDARDS. WORK WITHIN STATE RIGHTS-OF-WAY SHALL CONFORM TO THE LATEST EDITION OF THE STATE HIGHWAY DEPARTMENTS STANDARD SPECIFICATIONS FOR HIGHWAYS AND BRIDGES.
7. UPON AWARD OF CONTRACT, CONTRACTOR SHALL MAKE NECESSARY CONSTRUCTION NOTIFICATIONS AND APPLY FOR AND OBTAIN NECESSARY PERMITS, PAY FEES, AND POST BONDS ASSOCIATED WITH THE WORK INDICATED ON THE DRAWINGS, IN THE SPECIFICATIONS, AND IN THE CONTRACT DOCUMENTS. DO NOT CLOSE OR OBSTRUCT ROADWAYS, SIDEWALKS, AND FIRE HYDRANTS, WITHOUT APPROPRIATE PERMITS.
8. TRAFFIC SIGNAGE AND PAVEMENT MARKINGS SHALL CONFORM TO THE MANUAL OF UNIFORM TRAFFIC CONTROL DEVICES.
9. AREAS OUTSIDE THE LIMITS OF PROPOSED WORK DISTURBED BY THE CONTRACTOR'S OPERATIONS SHALL BE RESTORED BY THE CONTRACTOR TO THEIR ORIGINAL CONDITION AT THE CONTRACTOR'S EXPENSE.
10. IN THE EVENT THAT SUSPECTED CONTAMINATED SOIL, GROUNDWATER, AND OTHER MEDIA ARE ENCOUNTERED DURING EXCAVATION AND CONSTRUCTION ACTIVITIES BASED ON VISUAL, OLFACTORY, OR OTHER EVIDENCE, THE CONTRACTOR SHALL STOP WORK IN THE VICINITY OF THE SUSPECT MATERIAL TO AVOID FURTHER SPREADING OF THE MATERIAL, AND SHALL NOTIFY THE OWNER IMMEDIATELY SO THAT THE APPROPRIATE TESTING AND SUBSEQUENT ACTION CAN BE TAKEN.
11. CONTRACTOR SHALL PREVENT DUST, SEDIMENT, AND DEBRIS FROM EXITING THE SITE AND SHALL BE RESPONSIBLE FOR CLEANUP, REPAIRS AND CORRECTIVE ACTION IF SUCH OCCURS.
12. DAMAGE RESULTING FROM CONSTRUCTION LOADS SHALL BE REPAIRED BY THE CONTRACTOR AT NO ADDITIONAL COST TO OWNER.
13. CONTRACTOR SHALL CONTROL STORMWATER RUNOFF DURING CONSTRUCTION TO PREVENT ADVERSE IMPACTS TO OFF SITE AREAS, AND SHALL BE RESPONSIBLE TO REPAIR RESULTING DAMAGES, IF ANY, AT NO COST TO OWNER.
14. THIS PROJECT DISTURBS MORE THAN ONE ACRE OF LAND AND FALLS WITHIN THE NPDES CONSTRUCTION GENERAL PERMIT (CGP) PROGRAM AND EPA JURISDICTION. PRIOR TO THE START OF CONSTRUCTION CONTRACTOR IS TO FILE A CGP NOTICE OF INTENT WITH THE EPA AND PREPARE A STORMWATER POLLUTION PREVENTION PLAN IN ACCORDANCE WITH THE NPDES REGULATIONS. CONTRACTOR SHALL CONFIRM THE OWNER HAS ALSO FILED A NOTICE OF INTENT WITH THE EPA.

Utilities

1. THE LOCATIONS, SIZES, AND TYPES OF EXISTING UTILITIES ARE SHOWN AS AN APPROXIMATE REPRESENTATION ONLY. THE OWNER OR IT'S REPRESENTATIVE(S) HAVE NOT INDEPENDENTLY VERIFIED THIS INFORMATION AS SHOWN ON THE PLANS. THE UTILITY INFORMATION SHOWN DOES NOT GUARANTEE THE ACTUAL EXISTENCE, SERVICEABILITY, OR OTHER DATA CONCERNING THE UTILITIES, NOR DOES IT GUARANTEE AGAINST THE POSSIBILITY THAT ADDITIONAL UTILITIES MAY BE PRESENT THAT ARE NOT SHOWN ON THE PLANS. PRIOR TO ORDERING MATERIALS AND BEGINNING CONSTRUCTION, THE CONTRACTOR SHALL VERIFY AND DETERMINE THE EXACT LOCATIONS, SIZES, AND ELEVATIONS OF THE POINTS OF CONNECTIONS TO EXISTING UTILITIES AND, SHALL CONFIRM THAT THERE ARE NO INTERFERENCES WITH EXISTING UTILITIES AND THE PROPOSED UTILITY ROUTES, INCLUDING ROUTES WITHIN THE PUBLIC RIGHTS OF WAY.
2. WHERE AN EXISTING UTILITY IS FOUND TO CONFLICT WITH THE PROPOSED WORK, OR EXISTING CONDITIONS DIFFER FROM THOSE SHOWN SUCH THAT THE WORK CANNOT BE COMPLETED AS INTENDED, THE LOCATION, ELEVATION, AND SIZE OF THE UTILITY SHALL BE ACCURATELY DETERMINED WITHOUT DELAY BY THE CONTRACTOR, AND THE INFORMATION FURNISHED IN WRITING TO THE OWNER'S REPRESENTATIVE FOR THE RESOLUTION OF THE CONFLICT AND CONTRACTOR'S FAILURE TO NOTIFY PRIOR TO PERFORMING ADDITIONAL WORK RELEASES OWNER FROM OBLIGATIONS FOR ADDITIONAL PAYMENTS WHICH OTHERWISE MAY BE WARRANTED TO RESOLVE THE CONFLICT.
3. SET CATCH BASIN RIMS, AND INVERTS OF SEWERS, DRAINS, AND DITCHES IN ACCORDANCE WITH ELEVATIONS ON THE GRADING AND UTILITY PLANS.
4. RIM ELEVATIONS FOR DRAIN AND SEWER MANHOLES, WATER VALVE COVERS, GAS GATES, ELECTRIC AND TELEPHONE PULL BOXES, AND MANHOLES, AND OTHER SUCH ITEMS, ARE APPROXIMATE AND SHALL BE SET/RESET AS FOLLOWS:

   A. PAVEMENTS AND CONCRETE SURFACES: FLUSH

   B. ALL SURFACES ALONG ACCESSIBLE ROUTES: FLUSH

   C. LANDSCAPE, LOAM AND SEED, AND OTHER EARTH SURFACE AREAS: ONE INCH ABOVE SURROUNDING AREA AND TAPER EARTH TO THE RIM ELEVATION.
5. THE LOCATION, SIZE, DEPTH, AND SPECIFICATIONS FOR CONSTRUCTION OF PROPOSED PRIVATE UTILITY SERVICES SHALL BE INSTALLED ACCORDING TO THE REQUIREMENTS PROVIDED BY, AND APPROVED BY, THE RESPECTIVE UTILITY COMPANY (GAS, TELEPHONE, ELECTRIC, FIRE ALARM, ETC.). FINAL DESIGN LOADS AND LOCATIONS TO BE COORDINATED WITH OWNER AND ARCHITECT.
6. CONTRACTOR SHALL MAKE ARRANGEMENTS FOR AND SHALL BE RESPONSIBLE FOR PAYING FEES FOR POLE RELOCATION AND FOR THE ALTERATION AND ADJUSTMENT OF GAS, ELECTRIC, TELEPHONE, FIRE ALARM, AND ANY OTHER PRIVATE UTILITIES, WHETHER WORK IS PERFORMED BY CONTRACTOR OR BY THE UTILITIES COMPANY.
7. UTILITY PIPE MATERIALS SHALL BE AS FOLLOWS, UNLESS OTHERWISE NOTED ON THE PLAN:

   A. WATER PIPES SHALL BE DUCTILE IRON OR COPPER TUBING.

   B. SANITARY SEWER PIPES SHALL BE POLYVINYL CHLORIDE (PVC) SEWER PIPE.

   C. STORM DRAINAGE PIPES SHALL BE HIGH DENSITY POLYETHYLENE PIPE.

   D. PIPE INSTALLATION AND MATERIALS SHALL COMPLY WITH THE STATE PLUMBING CODE WHERE APPLICABLE. CONTRACTOR SHALL COORDINATE WITH LOCAL PLUMBING INSPECTOR PRIOR TO BEGINNING WORK.
8. CONTRACTOR SHALL COORDINATE WITH ELECTRICAL CONTRACTOR AND SHALL FURNISH EXCAVATION, INSTALLATION, AND BACKFILL OF ELECTRICAL FURNISHED SITEWORK RELATED ITEMS SUCH AS PULL BOXES, CONDUITS, DUCT BANKS, LIGHT POLE BASES, AND CONCRETE PADS. SITE CONTRACTOR SHALL FURNISH CONCRETE ENCASEMENT OF DUCT BANKS IF REQUIRED BY THE UTILITY COMPANY AND AS INDICATED ON THE DRAWINGS.
9. ALL DRAINAGE AND SANITARY STRUCTURE INTERIOR DIAMETERS (4' MIN.) SHALL BE DETERMINED BY THE MANUFACTURER BASED ON THE PIPE CONFIGURATIONS SHOWN ON THESE PLANS AND LOCAL MUNICIPAL STANDARDS. FOR MANHOLES THAT ARE 20 FEET IN DEPTH AND GREATER, THE MINIMUM DIAMETER SHALL BE 5 FEET.

Existing Conditions Information

1. BASE PLAN: THE PROPERTY LINES, THE TOPOGRAPHY, AND PHYSICAL FEATURES ARE BASED ON AN ACTUAL FIELD SURVEY PERFORMED ON THE GROUND BY SCHOFIELD, BARBINI & HOEHN, INC.
2. TOPOGRAPHY: ELEVATIONS ARE BASED ON NGVD 1929.
3. GEOTECHNICAL DATA INCLUDING TEST PIT AND BORING LOCATIONS AND ELEVATIONS WERE OBTAINED FROM GZA.

Document Use

1. THESE PLANS AND CORRESPONDING CADD DOCUMENTS ARE INSTRUMENTS OF PROFESSIONAL SERVICE, AND SHALL NOT BE USED, IN WHOLE OR IN PART, FOR ANY PURPOSE OTHER THAN FOR WHICH IT WAS CREATED WITHOUT THE EXPRESSED, WRITTEN CONSENT OF VHB. ANY UNAUTHORIZED USE, REUSE, MODIFICATION OR ALTERATION, INCLUDING AUTOMATED CONVERSION OF THIS DOCUMENT SHALL BE AT THE USER'S SOLE RISK WITHOUT LIABILITY OR LEGAL EXPOSURE TO VHB.

Layout and Materials

1. DIMENSIONS ARE FROM THE FACE OF CURB, FACE OF BUILDING, FACE OF WALL, AND CENTER LINE OF PAVEMENT MARKINGS, UNLESS OTHERWISE NOTED.
2. CURB RADII ARE 4 FEET UNLESS OTHERWISE NOTED.
3. CURBING SHALL BE PRECAST CONCRETE WITHIN THE SITE UNLESS OTHERWISE INDICATED ON THE PLANS.
4. SEE ARCHITECTURAL DRAWINGS FOR EXACT BUILDING DIMENSIONS AND DETAILS CONTIGUOUS TO THE BUILDING, INCLUDING SIDEWALKS, RAMPS, BUILDING ENTRANCES, STAIRWAYS, UTILITY PENETRATIONS, CONCRETE DOOR PADS, COMPACTOR PAD, LOADING DOCKS, BOLLARDS, ETC.
5. PROPOSED BOUNDS AND ANY EXISTING PROPERTY LINE MONUMENTATION DISTURBED DURING CONSTRUCTION SHALL BE SET OR RESET BY A PROFESSIONAL LICENSED SURVEYOR.
6. PRIOR TO START OF CONSTRUCTION, CONTRACTOR SHALL VERIFY EXISTING PAVEMENT ELEVATIONS AT INTERFACE WITH PROPOSED PAVEMENTS, AND EXISTING GROUND ELEVATIONS ADJACENT TO DRAINAGE OUTLETS TO ASSURE PROPER TRANSITIONS BETWEEN EXISTING AND PROPOSED FACILITIES.
7. SYMBOLS AND LEGENDS OF PROJECT FEATURES ARE GRAPHIC REPRESENTATIONS AND ARE NOT NECESSARILY SCALED TO THEIR ACTUAL DIMENSIONS OR LOCATIONS ON THE DRAWINGS. THE CONTRACTOR SHALL REFER TO THE DETAIL SHEET DIMENSIONS, MANUFACTURERS' LITERATURE, SHOP DRAWINGS AND FIELD MEASUREMENTS OF SUPPLIED PRODUCTS FOR LAYOUT OF THE PROJECT FEATURES.
8. CONTRACTOR SHALL NOT RELY SOLELY ON ELECTRONIC VERSIONS OF PLANS, SPECIFICATIONS, AND DATA FILES THAT ARE OBTAINED FROM THE DESIGNERS, BUT SHALL VERIFY LOCATION OF PROJECT FEATURES IN ACCORDANCE WITH THE PAPER COPIES OF THE PLANS AND SPECIFICATIONS THAT ARE SUPPLIED AS PART OF THE CONTRACT DOCUMENTS.

Demolition

1. CONTRACTOR SHALL REMOVE AND DISPOSE OF EXISTING MANMADE SURFACE FEATURES WITHIN THE LIMIT OF WORK INCLUDING BUILDINGS, STRUCTURES, PAVEMENTS, SLABS, CURBING, FENCES, UTILITY POLES, SIGNS, ETC. AS SHOWN ON THE DRAWINGS. REMOVE AND DISPOSE OF EXISTING UTILITIES, FOUNDATIONS AND UNSUITABLE MATERIAL BENEATH AND FOR A DISTANCE OF 10 FEET BEYOND THE PROPOSED BUILDING FOOTPRINT INCLUDING EXTERIOR COLUMNS.
2. EXISTING UTILITIES SHALL BE TERMINATED, UNLESS OTHERWISE NOTED, IN CONFORMANCE WITH LOCAL, STATE AND INDIVIDUAL UTILITY COMPANY STANDARD SPECIFICATIONS AND DETAILS. THE CONTRACTOR SHALL COORDINATE UTILITY SERVICE DISCONNECTS WITH THE UTILITY REPRESENTATIVES.
3. CONTRACTOR SHALL DISPOSE OF DEMOLITION DEBRIS IN ACCORDANCE WITH APPLICABLE FEDERAL, STATE AND LOCAL REGULATIONS, ORDINANCES AND STATUTES.
4. THE DEMOLITION LIMITS DEPICTED IN THE PLANS IS INTENDED TO AID THE CONTRACTOR DURING THE BIDDING AND CONSTRUCTION PROCESS AND IS NOT INTENDED TO DEPICT EACH AND EVERY ELEMENT OF DEMOLITION. THE CONTRACTOR IS RESPONSIBLE FOR IDENTIFYING THE DETAILED SCOPE OF DEMOLITION BEFORE SUBMITTING ITS BID/PROPOSAL TO PERFORM THE WORK AND SHALL MAKE NO CLAIMS AND SEEK NO ADDITIONAL COMPENSATION FOR CHANGED CONDITIONS OR UNFORESEEN OR LATENT SITE CONDITIONS RELATED TO ANY CONDITIONS DISCOVERED DURING EXECUTION OF THE WORK.
5. UNLESS OTHERWISE SPECIFICALLY PROVIDED ON THE PLANS OR IN THE SPECIFICATIONS, THE ENGINEER HAS NOT PREPARED DESIGNS FOR AND SHALL HAVE NO RESPONSIBILITY FOR THE PRESENCE, DISCOVERY, REMOVAL, ABATEMENT OR DISPOSAL OF HAZARDOUS MATERIALS, TOXIC WASTES OR POLLUTANTS AT THE PROJECT SITE. THE ENGINEER SHALL NOT BE RESPONSIBLE FOR ANY CLAIMS OF LOSS, DAMAGE, EXPENSE, DELAY, INJURY OR DEATH ARISING FROM THE PRESENCE OF HAZARDOUS MATERIAL AND CONTRACTOR SHALL INDEMNIFY AND HOLD HARMLESS THE ENGINEER FROM ANY CLAIMS MADE IN CONNECTION THEREWITH. MOREOVER, THE ENGINEER SHALL HAVE NO ADMINISTRATIVE OBLIGATIONS OF ANY TYPE WITH REGARD TO ANY CONTRACTOR AMENDMENT INVOLVING THE ISSUES OF PRESENCE, DISCOVERY, REMOVAL, ABATEMENT OR DISPOSAL OF ASBESTOS OR OTHER HAZARDOUS MATERIALS.

Erosion Control

1. PRIOR TO STARTING ANY OTHER WORK ON THE SITE, THE CONTRACTOR SHALL NOTIFY APPROPRIATE AGENCIES AND SHALL INSTALL EROSION CONTROL MEASURES AS SHOWN ON THE PLANS AND AS IDENTIFIED IN FEDERAL, STATE, AND LOCAL APPROVAL DOCUMENTS PERTAINING TO THIS PROJECT.
2. CONTRACTOR SHALL INSPECT AND MAINTAIN EROSION CONTROL MEASURES, AND REMOVE SEDIMENT THEREFROM ON A WEEKLY BASIS AND WITHIN TWELVE HOURS AFTER EACH STORM EVENT AND DISPOSE OF SEDIMENTS IN AN UPLAND AREA SUCH THAT THEY DO NOT ENCUMBER OTHER DRAINAGE STRUCTURES AND PROTECTED AREAS.
3. CONTRACTOR SHALL BE FULLY RESPONSIBLE TO CONTROL CONSTRUCTION SUCH THAT SEDIMENTATION SHALL NOT AFFECT REGULATORY PROTECTED AREAS, WHETHER SUCH SEDIMENTATION IS CAUSED BY WATER, WIND, OR DIRECT DEPOSIT.
4. CONTRACTOR SHALL PERFORM CONSTRUCTION SEQUENCING SUCH THAT EARTH MATERIALS ARE EXPOSED FOR A MINIMUM OF TIME BEFORE THEY ARE COVERED, SEEDED, OR OTHERWISE STABILIZED TO PREVENT EROSION.
5. UPON COMPLETION OF CONSTRUCTION AND ESTABLISHMENT OF PERMANENT GROUND COVER, CONTRACTOR SHALL REMOVE AND DISPOSE OF EROSION CONTROL MEASURES AND CLEAN SEDIMENT AND DEBRIS FROM ENTIRE DRAINAGE AND SEWER SYSTEMS.

Infiltration Basin and Bioretention Area Protection During Construction

FOR THE LONG-TERM FUNCTION OF THE INFILTRATION SYSTEMS (SURFACE AND SUBSURFACE), CARE MUST BE TAKEN IN THIS AREA DURING CONSTRUCTION. THE CONTRACTOR SHALL EMPLOY THE FOLLOWING MINIMUM BMP'S:

1. THE INFILTRATION AREA SHALL NOT BE USED AS A CONSTRUCTION SEDIMENTATION BASIN.
2. ALL STORMWATER RUNOFF FROM EXPOSED SURFACES SHALL BE DIRECTED AWAY FROM THE INFILTRATION AREA.
3. CONSTRUCTION EQUIPMENT, VEHICULAR TRAFFIC, PARKING OF VEHICLES, AND STOCKPILING OF CONSTRUCTION AND EARTH MATERIALS SHALL BE OUTSIDE THE LIMITS OF THE INFILTRATION AREA.
4. EXCAVATION FOR CONSTRUCTION OF THE INFILTRATION SYSTEM SHALL BE PERFORMED MANUALLY OR BY A HYDRAULIC EXCAVATOR OR SOME OTHER SIMILAR MEANS TO ENSURE THAT THE EQUIPMENT IS NOT IN DIRECT CONTACT WITH THE NATURAL INFILTRATION EARTH MATERIAL AND DOES NOT CAUSE COMPACTION OF THIS MATERIAL.
5. THE CONTRACTOR SHALL INSTALL SAND BAGS, STRAW BALES OR OTHER MEASURES AROUND THE PERIMETER OF THE INFILTRATION AREA TO PREVENT THE USE OF THIS AREA FOR ALL ACTIVITIES THAT MIGHT DAMAGE THE INFILTRATION SYSTEM AREA OR REDUCE THE SOIL PERMEABILITY RATES. THESE EROSION CONTROL MEASURES MAY BE REMOVED FOR FINAL GRADING AND LANDSCAPING OF THE AREA.
6. INFILTRATION AREA SHALL BE STAKED AND FENCED OFF PRIOR TO CONSTRUCTION. THIS IS REQUIRED TO PREVENT OVER COMPACTION OF SOILS WITHIN INFILTRATION AREA. FAILURE TO DO SO SHALL REQUIRE REMEDIAL ACTION AS DIRECTED BY ENGINEER WITH NO ADDITIONAL COST TO OWNER.
7.

VHB
Vanasse Hangen Brustlin, Inc.
Transportation
Land Development
Environmental Services

10 Dorrance Street, Suite 400
Providence, Rhode Island 02903
401.272.8100 • FAX 401.273.9694

No.	Revision	Date	Appvd.

Designed by | Drawn by | Checked by
CAD checked by | Approved by
Scale: Not to Scale | Date: July 1, 2013

Project Title
Proposed Stop & Shop Store #0423

Water Street
Tisbury, Massachusetts

Issued for
Permitting

Not Approved for Construction

Drawing Title
Legend and General Notes

Drawing Number
C-1

Sheet of
1 9

Project Number
72451.00

Saved Friday, June 28, 2013 1:23:58 PM DWHITE Plotted Friday, June 28, 2013 1:24:19 PM White, Dave

\\RI-DATA\PROJECTS\72451.00\CAD\ED\PLANSET\72451-CONTEXT

80 0 80 160
SCALE IN FEET

VHB
Vanasse Hangen Brustlin, Inc.

Transportation
Land Development
Environmental Services

10 Dorrance Street, Suite 400
Providence, Rhode Island 02903
401.272.8100 • FAX 401.273.9694

No.	Revision	Date	Appvd.

Designed by | Drawn by | Checked by
CAD checked by | Approved by
Scale: As Noted | Date: July 1, 2013

Project Title
Proposed Stop & Shop
Store #0423

Water Street
Tisbury, Massachusetts

Issued for
Permitting

Not Approved for Construction

Drawing Title
Overall Context Plan

Drawing Number
C-2

Sheet 2 of 9

Project Number
72451.00

Saved Friday, June 28, 2013 2:22:29 PM GBURKE Plotted Friday, June 28, 2013 2:22:57 PM Burke, Genevieve

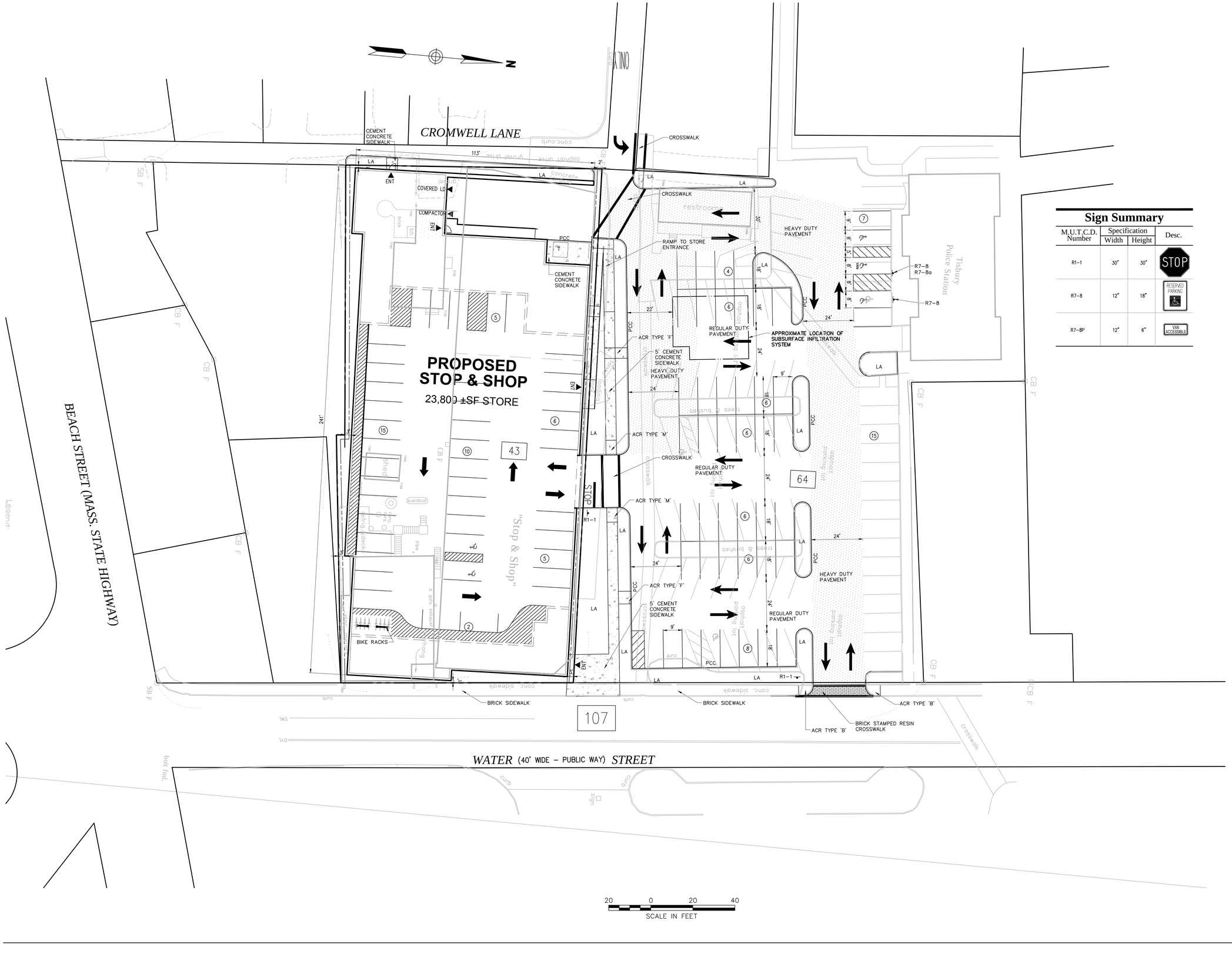

20 0 20 40
SCALE IN FEET

Sign Summary

M.U.T.C.D. Number	Specification Width	Specification Height	Desc.
R1-1	30"	30"	STOP
R7-8	12"	18"	RESERVED PARKING
R7-8P	12"	6"	VAN ACCESSIBLE

VHB
Vanasse Hangen Brustlin, Inc.

Transportation
Land Development
Environmental Services

10 Dorrance Street, Suite 400
Providence, Rhode Island 02903
401.272.8100 • FAX 401.273.9694

No.	Revision	Date	Appvd.

Designed by | Drawn by | Checked by
CAD checked by | Approved by
Scale: As Noted | Date: July 1, 2013

Project Title
Proposed Stop & Shop Store #0423

Water Street
Tisbury, Massachusetts

Issued for
Permitting

Not Approved for Construction

Drawing Title
Layout and Materials Plan

Drawing Number
C-3

Sheet 3 of 9

Project Number
72451.00

Saved Thursday, June 27, 2013 3:38:16 PM GBURKE Plotted Friday, June 28, 2013 2:03:19 PM Burke, Genevieve

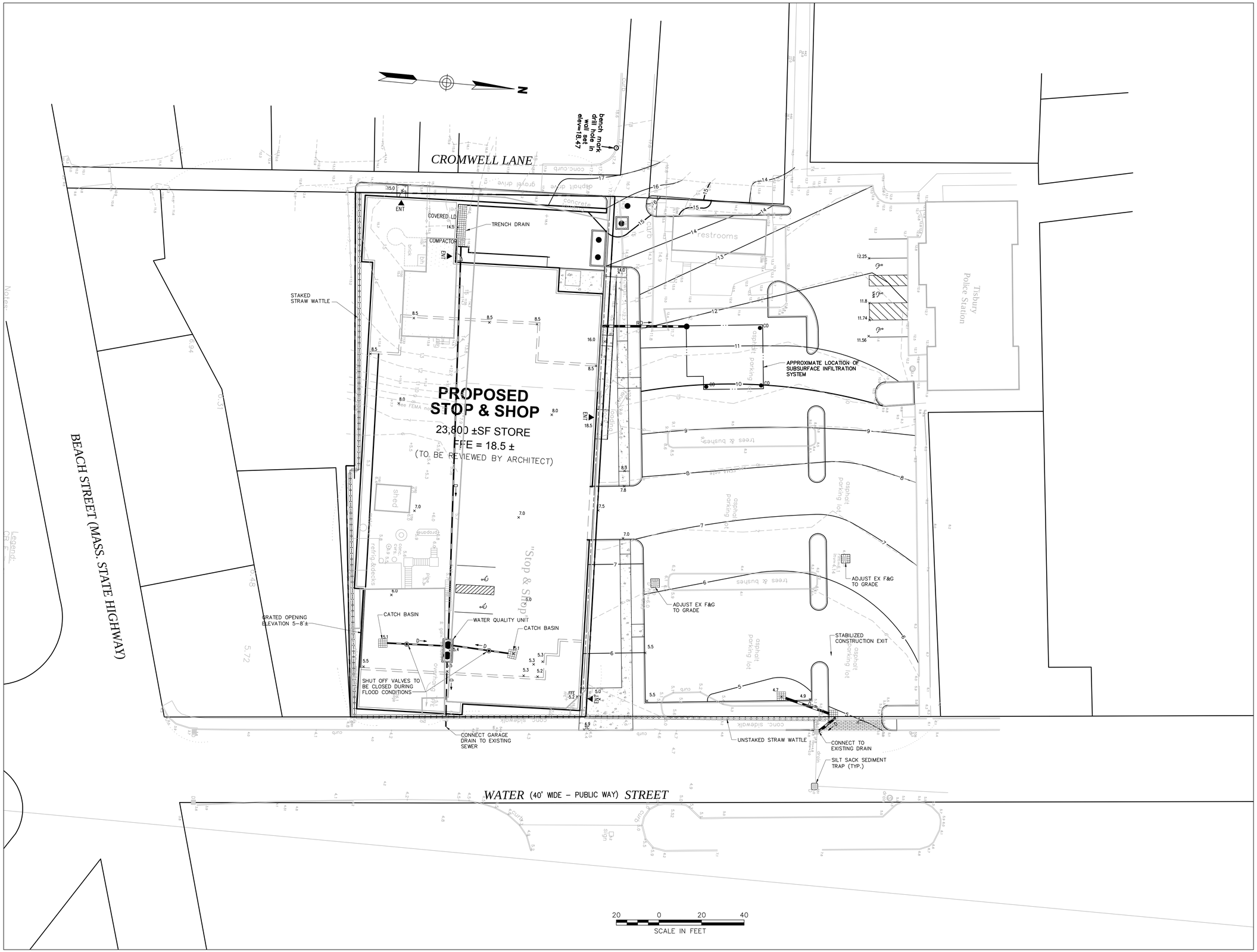

VHB
Vanasse Hangen Brustlin, Inc.
Transportation
Land Development
Environmental Services
10 Dorrance Street, Suite 400
Providence, Rhode Island 02903
401.272.8100 • FAX 401.273.9694

No.	Revision	Date	Appvd.

Designed by	Drawn by	Checked by
CAD checked by	Approved by	
Scale As Noted	Date July 1, 2013	

Project Title

Proposed Stop & Shop Store #0423

Water Street
Tisbury, Massachusetts

Issued for

Permitting

Not Approved for Construction

Drawing Title

Grading, Drainage, and Erosion Control Plan

Drawing Number

C-4

Sheet 4 of 9

Project Number 72451.00

Saved: Friday, June 28, 2013 2:23:22 PM GBURKE Plotted: Friday, June 28, 2013 2:33:15 PM Burke, Genevieve

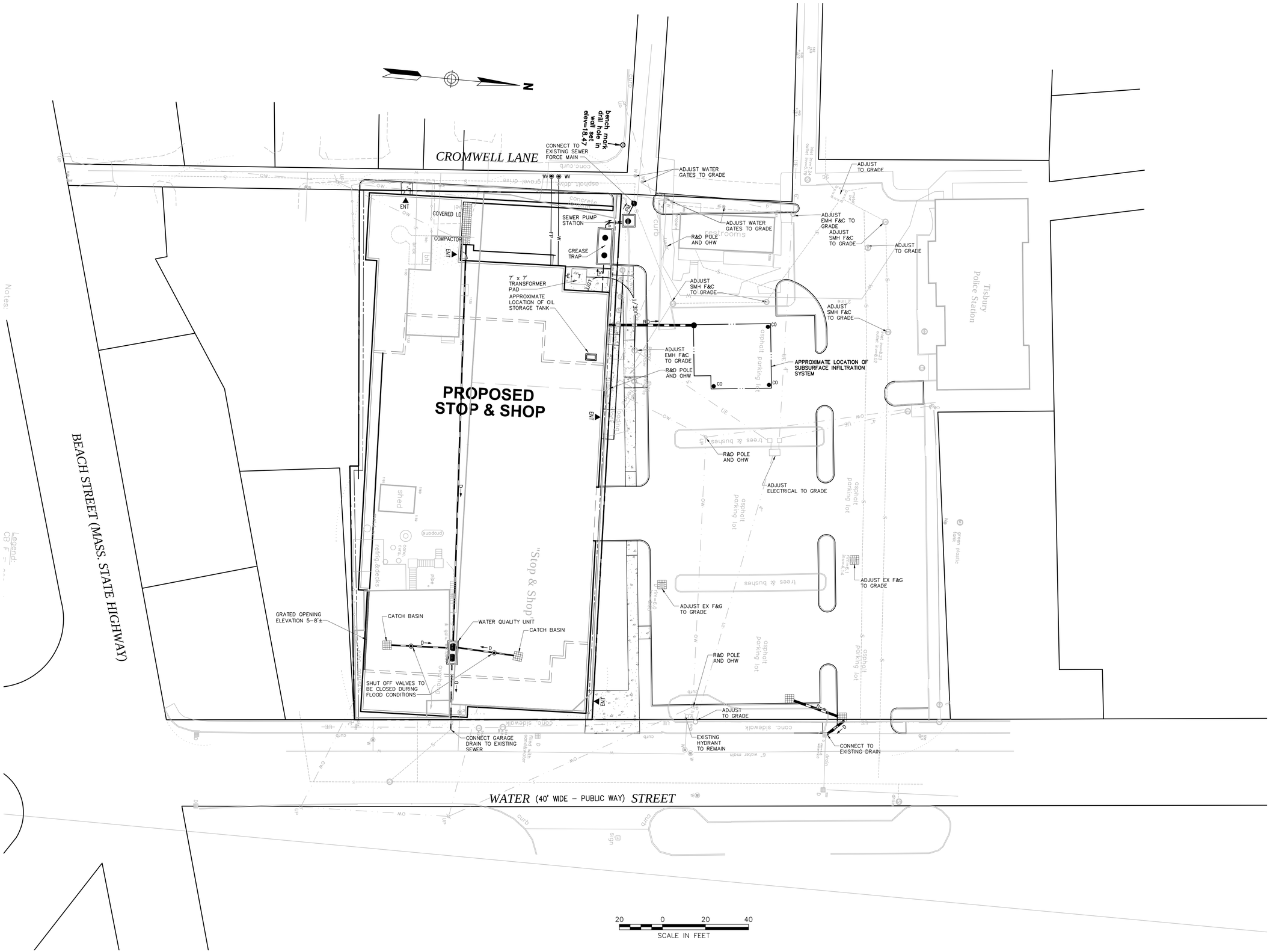

VHB
Vanasse Hangen Brustlin, Inc.
Transportation
Land Development
Environmental Services
10 Dorrance Street, Suite 400
Providence, Rhode Island 02903
401.272.8100 • FAX 401.273.9694

No.	Revision	Date	Appvd.

Designed by | Drawn by | Checked by
CAD checked by | Approved by
Scale 1"=10' | Date July 1, 2013

Project Title
Proposed Stop & Shop Store #0423

Water Street
Tisbury, Massachusetts

Issued for
Permitting

Not Approved for Construction

Drawing Title
Utility Plan

Drawing Number
C-5

Sheet 5 of 9

Project Number
72451.00

Saved Friday, June 28, 2013 11:45:56 AM GBURKE Plotted Friday, June 28, 2013 11:42:38 PM Burke, Genevieve
J:\72451.00\CAD\LD\PLANSET\72451-DT

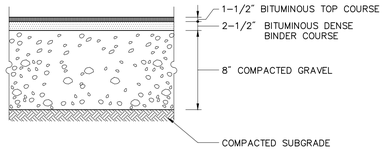

Heavy Duty Flexible Pavement

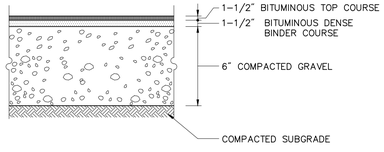

Standard Duty Flexible Pavement

Note:

PAVEMENT SECTIONS ARE SUBJECT TO CHANGE AND WILL BE BASED ON THE RESULTS OF FURTHER GEOTECHNICAL INVESTIGATIONS.

Bituminous Concrete Pavement Sections

12/11

N.T.S. Source: VHB LD_430s

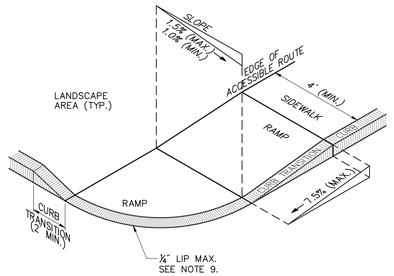

Notes:

1. THE MAXIMUM ALLOWABLE SIDEWALK AND CURB RAMP CROSS SLOPES SHALL BE 1.5 (1% MIN.).
2. THE MAXIMUM ALLOWABLE SLOPE OF ACCESSIBLE ROUTE EXCLUDING CURB RAMPS SHALL BE 5%.
3. THE MAXIMUM ALLOWABLE SLOPE OF ACCESSIBLE ROUTE AT CURB RAMPS SHALL BE 7.5%.
4. A MINIMUM OF 3 FEET CLEAR SHALL BE MAINTAINED AT ANY PERMANENT OBSTACLE IN ACCESSIBLE ROUTE (I.E., HYDRANTS, UTILITY POLES, TREE WELLS, SIGNS, ETC.).
5. CURB TREATMENT VARIES, SEE PLANS FOR CURB TYPE.
6. RAMP, CURB AND ADJACENT PAVEMENTS SHALL BE GRADED TO PREVENT PONDING.
7. SEE TYPICAL SIDEWALK SECTION FOR RAMP CONSTRUCTION.
8. WHERE ACCESSIBLE ROUTES ARE LESS THAN 5' IN WIDTH (EXCLUDING CURBING) A 5' x 5' PASSING AREA SHALL BE PROVIDED AT INTERVALS NOT TO EXCEED 200 FEET.
9. ELIMINATE CURBING AT RAMP WHERE IT ABUTS ROADWAY, EXCEPT WHERE VERTICAL CURBING IS INDICATED ON THE DRAWINGS TO BE INSTALLED AND SET FLUSH.

Accessible Curb Ramp (ACR) - Type 'B'

11/10

N.T.S. Source: VHB LD_501

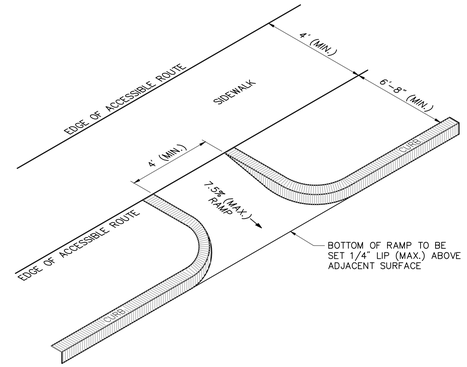

Notes:

1. THE MAXIMUM ALLOWABLE SIDEWALK AND CURB RAMP CROSS SLOPES SHALL BE 1.5 (1% MIN.).
2. THE MAXIMUM ALLOWABLE SLOPE OF ACCESSIBLE ROUTE EXCLUDING CURB RAMPS SHALL BE 5%.
3. THE MAXIMUM ALLOWABLE SLOPE OF ACCESSIBLE ROUTE AT CURB RAMPS SHALL BE 7.5%.
4. A MINIMUM OF 3 FEET CLEAR SHALL BE MAINTAINED AT ANY PERMANENT OBSTACLE IN ACCESSIBLE ROUTE (I.E., HYDRANTS, UTILITY POLES, TREE WELLS, SIGNS, ETC.).
5. CURB TREATMENT VARIES, SEE PLANS FOR CURB TYPE.
6. RAMP, CURB, AND ADJACENT PAVEMENTS SHALL BE GRADED TO PREVENT PONDING.
7. TYPICAL SIDEWALK SECTION FOR RAMP SECTION CONSTRUCTION.
8. WHERE ACCESSIBLE ROUTES ARE LESS THAN 5' IN WIDTH (EXCLUDING CURBING) A 5' x 5' PASSING AREA SHALL BE PROVIDED AT INTERVALS NOT TO EXCEED 200 FEET.

Accessible Curb Ramp (ACR) Type 'F'

11/10

N.T.S. Source: VHB LD_505

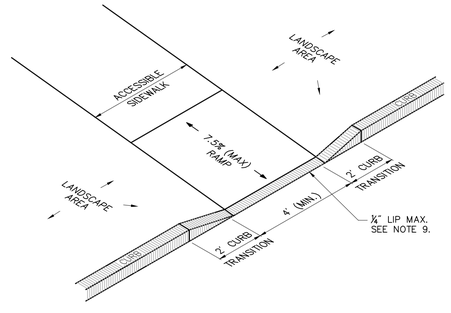

Notes:

1. THE MAXIMUM ALLOWABLE SIDEWALK AND CURB RAMP CROSS SLOPES SHALL BE 1.5 (1% MIN.).
2. THE MAXIMUM ALLOWABLE SLOPE OF ACCESSIBLE ROUTE EXCLUDING CURB RAMPS SHALL BE 5%.
3. THE MAXIMUM ALLOWABLE SLOPE OF ACCESSIBLE ROUTE AT CURB RAMPS SHALL BE 7.5%.
4. A MINIMUM OF 3 FEET CLEAR SHALL BE MAINTAINED AT ANY PERMANENT OBSTACLE IN ACCESSIBLE ROUTE (I.E., HYDRANTS, UTILITY POLES, TREE WELLS, SIGNS, ETC.).
5. CURB TREATMENT VARIES, SEE PLANS FOR CURB TYPE.
6. RAMP, CURB AND ADJACENT PAVEMENTS SHALL BE GRADED TO PREVENT PONDING.
7. TYPICAL SIDEWALK SECTION FOR RAMP SECTION CONSTRUCTION.
8. WHERE ACCESSIBLE ROUTES ARE LESS THAN 5' IN WIDTH (EXCLUDING CURBING) A 5' x 5' PASSING AREA SHALL BE PROVIDED AT INTERVALS NOT TO EXCEED 200 FEET.
9. ELIMINATE CURBING (OTHER THAN VERTICAL CURBING, WHICH SHALL BE SET FLUSH) WHERE IT ABUTS ROADWAY.

Accessible Curb Ramp (ACR) Type 'M'

11/10

N.T.S. Source: VHB LD_512

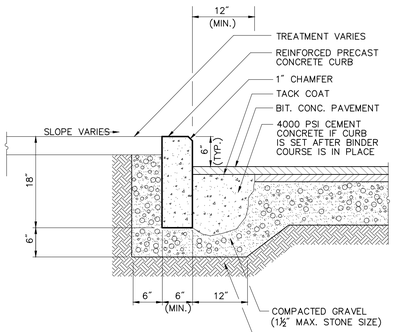

Precast Concrete Curb (PCC)

12/11

N.T.S. Source: VHB LD_404s

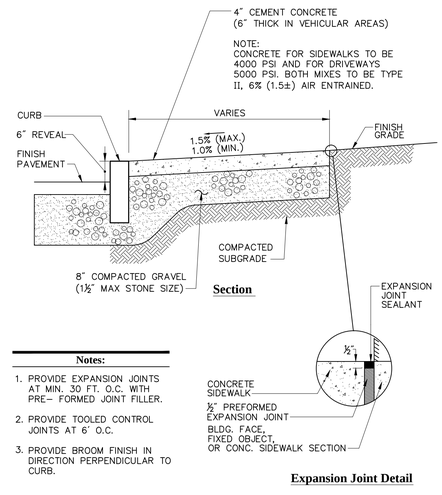

Notes:

1. PROVIDE EXPANSION JOINTS AT MIN. 30 FT. O.C. WITH PRE– FORMED JOINT FILLER.
2. PROVIDE TOOLED CONTROL JOINTS AT 6' O.C.
3. PROVIDE BROOM FINISH IN DIRECTION PERPENDICULAR TO CURB.

Expansion Joint Detail

Concrete Sidewalk

4/11

N.T.S. Source: VHB LD_420

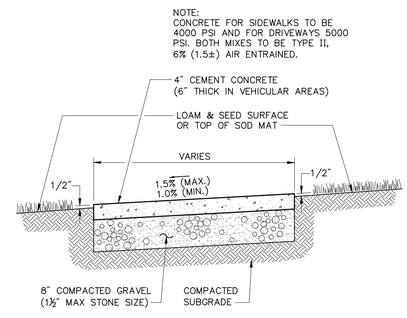

Notes:

1. PROVIDE EXPANSION JOINTS AT MIN. 30 FT. O.C. WITH PRE– FORMED JOINT FILLER.
2. PROVIDE TOOLED CONTROL JOINTS AT 6' O.C.
3. PROVIDE BROOM FINISH IN DIRECTION PERPENDICULAR TO SIDEWALK DIRECTION.

Concrete Sidewalk in Landscape Area

11/12

N.T.S. Source: VHB LD_426

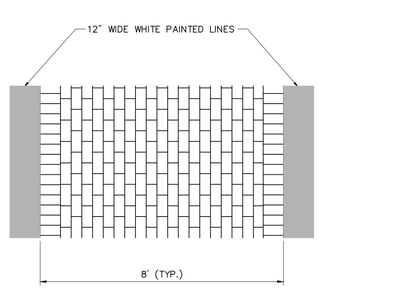

Notes:

1. BRICK PATTERN TO BE STAMPED INTO MECHANICALLY HEATED BITUMINOUS CONCRETE SURFACE WITH VIBRATORY PLATE COMPACTOR APPLIED TO STEEL BRICK FORM.
2. BRICK AREA TO BE PAINTED WITH "BRICK RED" COLOR PAINT.

Stamped Brick Crosswalk

6/08

N.T.S. Source: VHB LD_425

Vanasse Hangen Brustlin, Inc.

Transportation
Land Development
Environmental Services

10 Dorrance Street, Suite 400
Providence, Rhode Island 02903
401.272.8100 • FAX 401.273.9694

No.	Revision	Date	Appvd.

Designed by | Drawn by | Checked by
CAD checked by | Approved by
Scale: Not to Scale | Date: July 1, 2013

Project Title

Proposed Stop & Shop Store #0423

Water Street
Tisbury, Massachusetts

Issued for

Permitting

Not Approved for Construction

Drawing Title

Site Details 1

Drawing Number

C-6

Sheet 6 of 9

Project Number 72451.00

Saved Friday, June 28, 2013 11:45:56 AM GBURKE Plotted Friday, June 28, 2013 11:43:21 PM Burke, Genevieve
J:\72451.00\CAD\LD\PLANSET\72451-DT

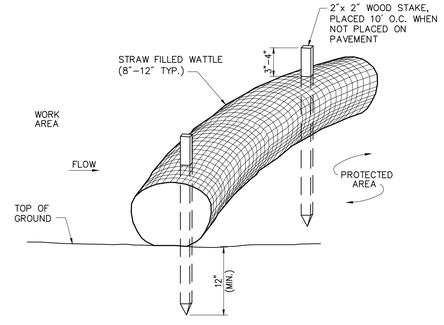

Notes:

1. STRAW WATTLE SHALL BE AS MANUFACTURED BY EARTHSAVER OR APPROVED EQUAL.
2. STRAW WATTLES SHALL OVERLAP A MINIMUM OF 12 INCHES.
3. STRAW WATTLE SHALL BE INSPECTED PERIODICALLY AND AFTER ALL STORM EVENTS, AND REPAIR OR REPLACEMENT SHALL BE PERFORMED PROMPTLY AS NEEDED.
4. TEMPORARY STRAW WATTLES TO BE REMOVED BY CONTRACTOR. ALL OTHERS TO REMAIN IN PLACE UNLESS DIRECTED OTHERWISE BY ENGINEER.
5. IF NON BIODEGRADABLE NETTING IS USED THE NETTING SHALL BE COLLECTED AND DISPOSED OF OFFSITE.

Straw Wattle - Erosion Control Barrier

8/12

N.T.S. Source: VHB LD_659

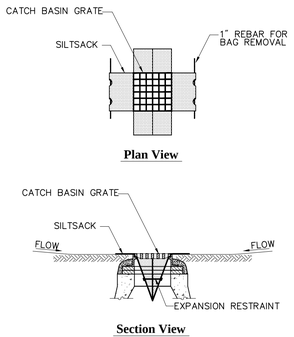

Notes:

1. INSTALL SILTSACK IN ALL CATCH BASINS WHERE INDICATED ON THE PLAN BEFORE COMMENCING WORK OR IN PAVED AREAS AFTER BINDER COURSE IS PLACED AND HAY BALES HAVE BEEN REMOVED.
2. GRATE TO BE PLACED OVER SILTSACK.
3. SILTSACK SHALL BE INSPECTED PERIODICALLY AND AFTER ALL STORM EVENTS AND CLEANING OR REPLACEMENT SHALL BE PERFORMED PROMPTLY AS NEEDED. MAINTAIN UNTIL UPSTREAM AREAS HAVE BEEN PERMANENTLY STABILIZED

Siltsack Sediment Trap

6/08

N.T.S. Source: VHB LD_674

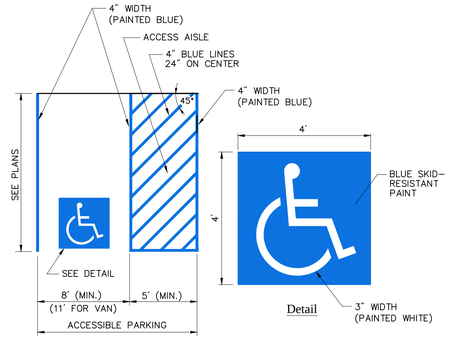

Notes:

1. ALL DIMENSIONS TO EDGES OF 4" PAVEMENT STRIPING.
2. 8' STALL WIDTH REFERS TO 8' CLEAR BETWEEN INSIDE EDGES OF PAVEMENT MARKINGS.
3. ALL SLOPES THROUGHOUT THE ACCESSIBLE PARKING AND AISLE AREAS SHALL NOT EXCEED 1.5%.

Accessible Parking Space

11/10

N.T.S. Source: VHB LD_552

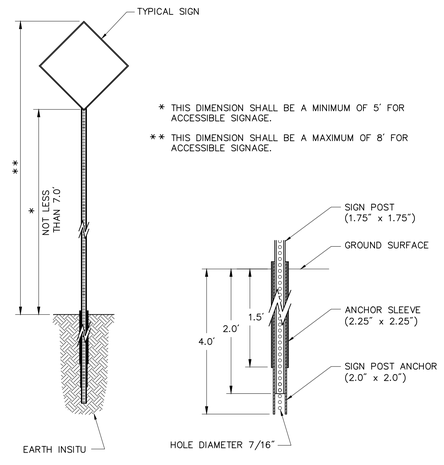

Sign Post - Type 'B'

12/12

N.T.S. Source: VHB LD_702

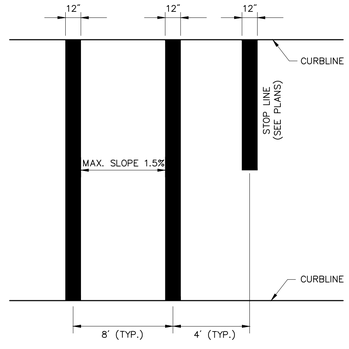

Notes:

1. TWELVE INCH (12") LINES SHALL BE APPLIED IN ONE APPLICATION, NO COMBINATION OF LINES (TWO – 6 INCH LINES) WILL BE ACCEPTED.
2. CROSS WALK SIDESLOPE SHALL NOT EXCEED 1.5%.

Crosswalk

6/08

N.T.S. Source: VHB LD_553s

VHB
Vanasse Hangen Brustlin, Inc.
Transportation
Land Development
Environmental Services
10 Dorrance Street, Suite 400
Providence, Rhode Island 02903
401.272.8100 • FAX 401.273.9694

No.	Revision	Date	Appvd.

Designed by | Drawn by | Checked by
CAD checked by | Approved by
Scale: Not to Scale | Date: July 1, 2013

Project Title
Proposed Stop & Shop Store #0423

Water Street
Tisbury, Massachusetts

Issued for
Permitting

Not Approved for Construction

Drawing Title
Site Details 2

Drawing Number
C-7

Sheet 7 of 9

Project Number
72451.00

Saved Friday, June 28, 2013 11:45:56 AM GBURKE Plotted Friday, June 28, 2013 1:43:50 PM Burke, Genevieve

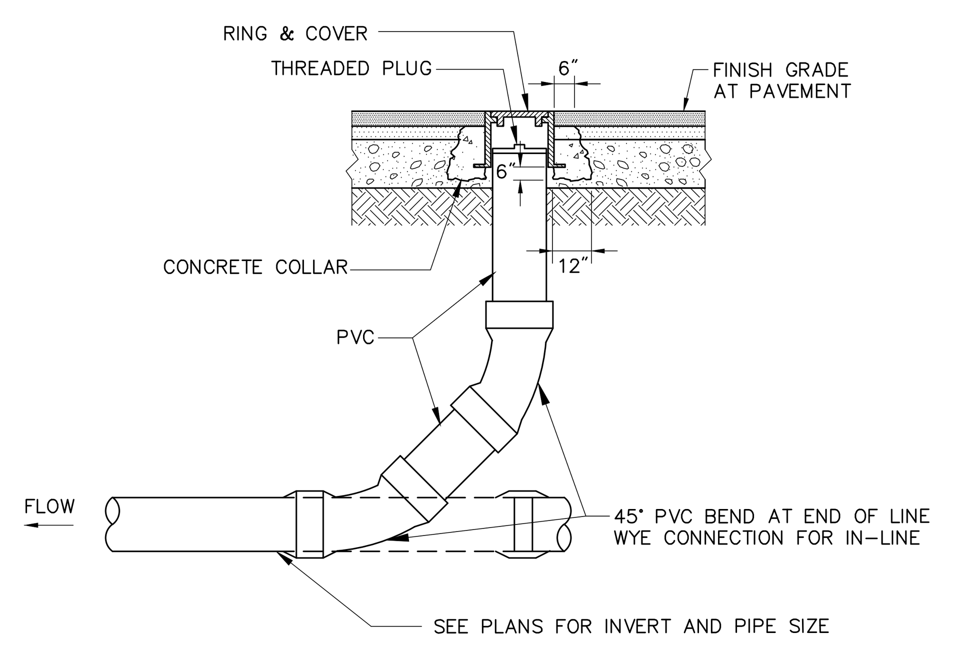

Cleanout - Paved Area

5/13

N.T.S. Source: VHB LD_303

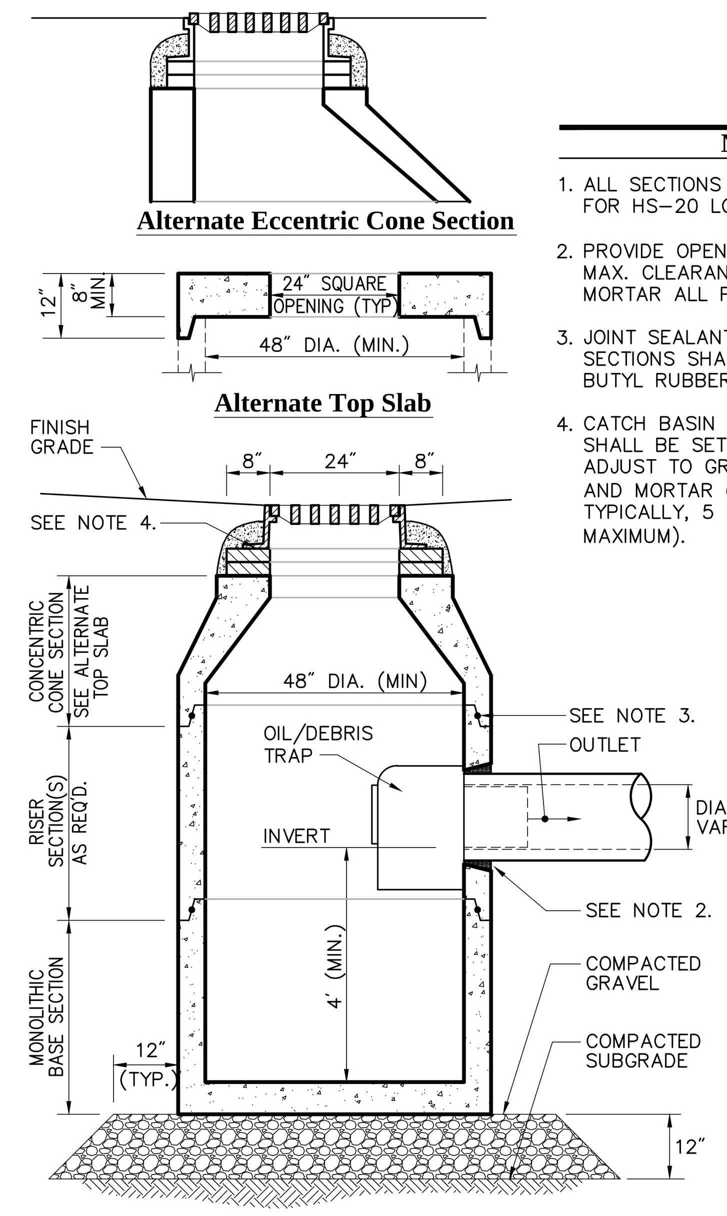

Notes:

1. ALL SECTIONS SHALL BE DESIGNED FOR HS-20 LOADING.
2. PROVIDE OPENINGS FOR PIPES WITH 2" MAX. CLEARANCE TO OUTSIDE OF PIPE. MORTAR ALL PIPE CONNECTIONS.
3. JOINT SEALANT BETWEEN PRECAST SECTIONS SHALL BE PREFORMED BUTYL RUBBER.
4. CATCH BASIN FRAME AND GRATE SHALL BE SET IN FULL MORTAR BED. ADJUST TO GRADE WITH CLAY BRICK AND MORTAR (2 BRICK COURSES TYPICALLY, 5 BRICK COURSES MAXIMUM).

Catch Basin (CB) With Oil/Debris Trap

6/08

N.T.S. Source: VHB LD_101

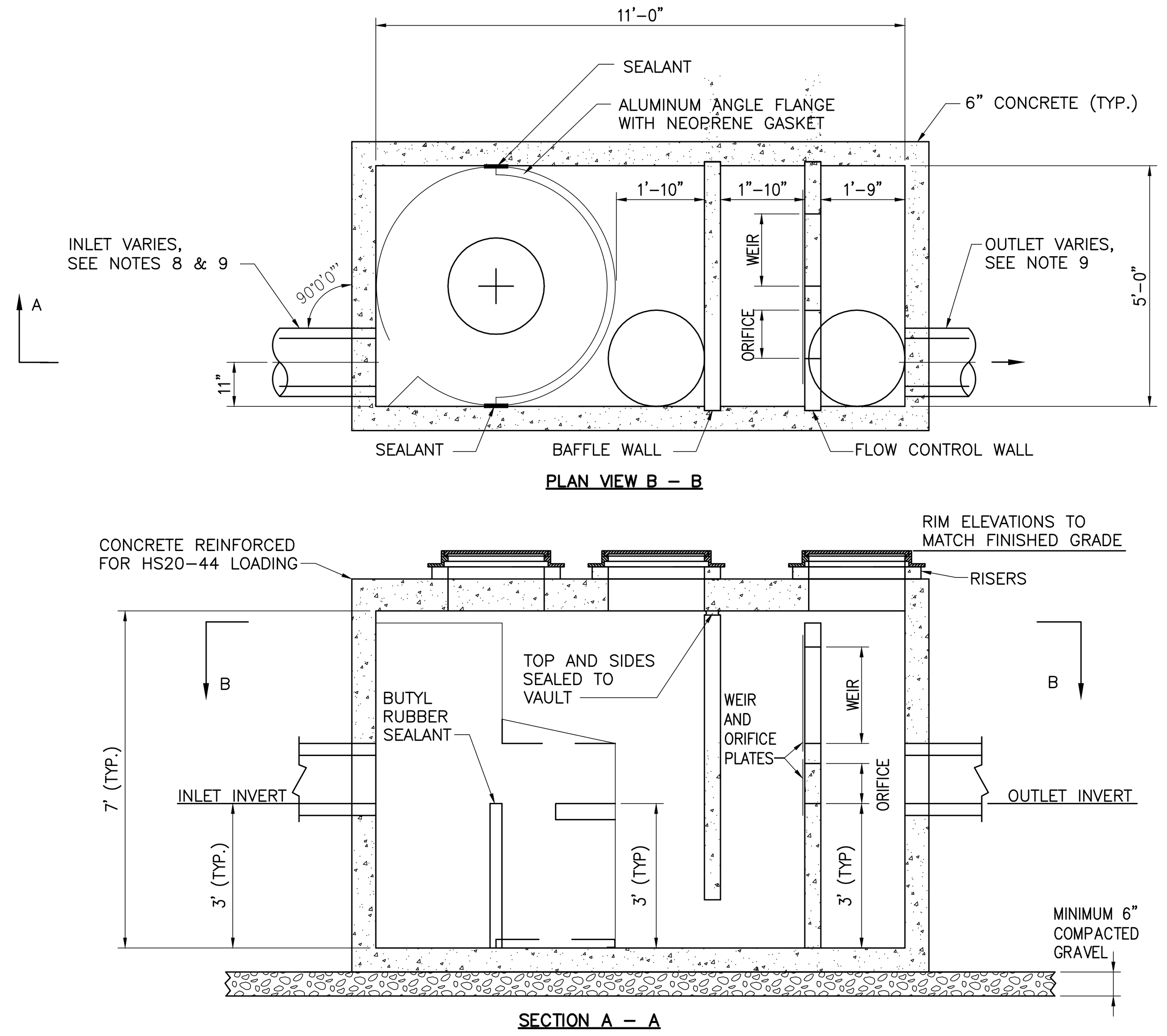

NOTES:

1. STORMWATER TREATMENT SYSTEM (SWTS) SHALL HAVE:
   PEAK TREATMENT CAPACITY: 4.5 CFS
   SEDIMENT STORAGE: 1.75 CU YD
   SEDIMENT CHAMBER DIA: 5.0' MIN 2.
2. SWTS SHALL BE CONTAINED IN ONE RECTANGULAR STRUCTURE
3. SWTS SHALL REMOVE 80% OF THE NET ANNUAL TSS LOADING BASED ON A 50 MICRON SIZE PARTICLE
4. SWTS SHALL RETAIN FLOATABLES AND TRAPPED SEDIMENT UP TO AND INCLUDING PEAK TREATMENT CAPACITY.
5. SWTS INVERTS IN AND OUT SHALL BE AT THE SAME ELEVATION.
6. SWTS SHALL NOT BE COMPROMISED BY EFFECTS OF DOWNSTREAM TAILWATER.
7. SWTS SHALL HAVE NO INTERNAL COMPONENTS THAT OBSTRUCT MAINTENANCE ACCESS.
8. INLET PIPE MUST BE PERPENDICULAR TO THE STRUCTURE.
9. PIPE ORIENTATION MAY VARY; SEE CONSTRUCTION PLANS FOR SIZE AND LOCATION.
10. PURCHASER SHALL NOT BE RESPONSIBLE FOR ASSEMBLY OF UNIT
11. MANHOLE FRAMES AND PERFORATED COVERS SUPPLIED WITH SYSTEM, NOT INSTALLED.
12. PURCHASER TO PREPARE EXCAVATION AND PROVIDE CRANE FOR OFF-LOADING & SETTING AT TIME OF DELIVERY.

Water Quality Unit

N.T.S.

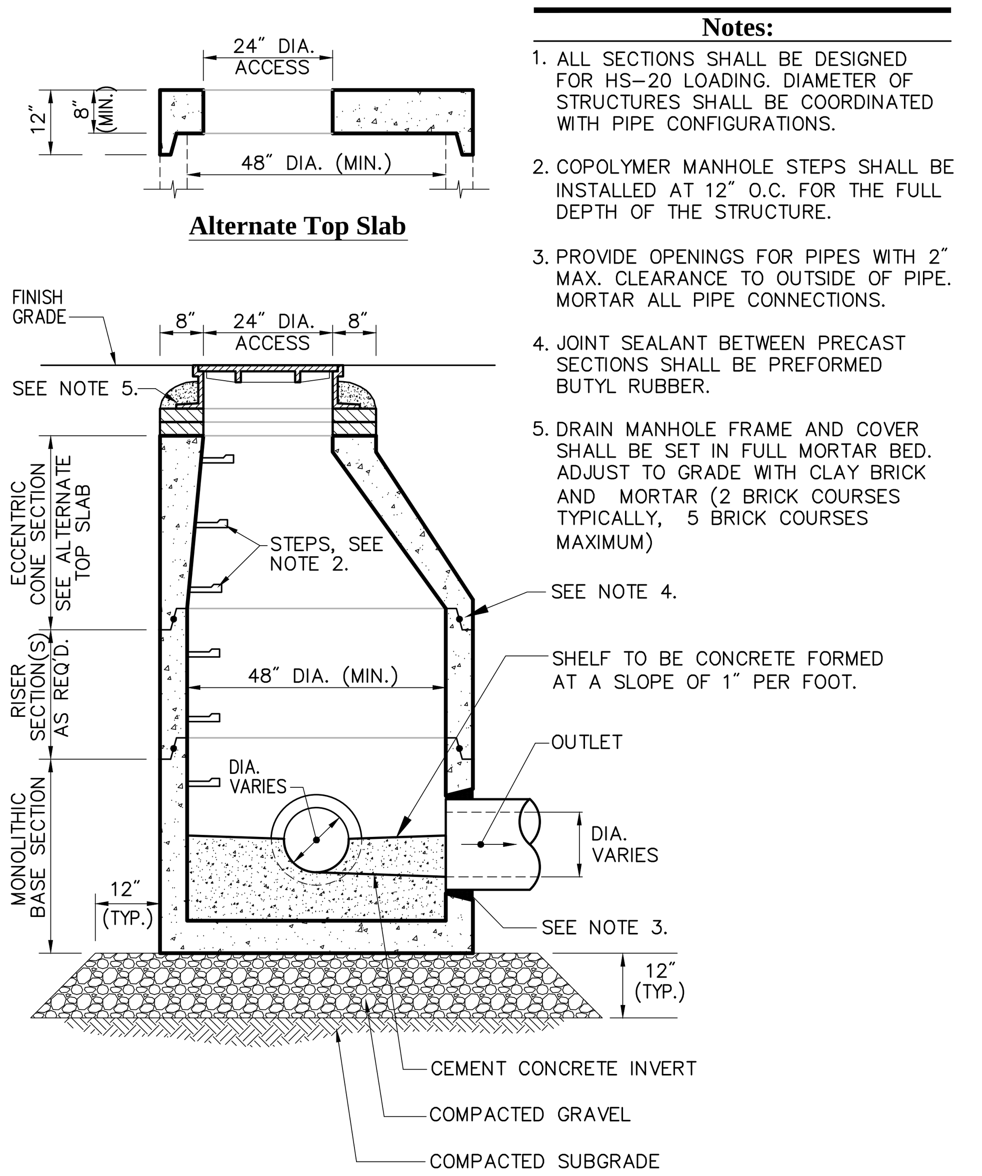

Notes:

1. ALL SECTIONS SHALL BE DESIGNED FOR HS-20 LOADING. DIAMETER OF STRUCTURES SHALL BE COORDINATED WITH PIPE CONFIGURATIONS.
2. COPOLYMER MANHOLE STEPS SHALL BE INSTALLED AT 12" O.C. FOR THE FULL DEPTH OF THE STRUCTURE.
3. PROVIDE OPENINGS FOR PIPES WITH 2" MAX. CLEARANCE TO OUTSIDE OF PIPE. MORTAR ALL PIPE CONNECTIONS.
4. JOINT SEALANT BETWEEN PRECAST SECTIONS SHALL BE PREFORMED BUTYL RUBBER.
5. DRAIN MANHOLE FRAME AND COVER SHALL BE SET IN FULL MORTAR BED. ADJUST TO GRADE WITH CLAY BRICK AND MORTAR (2 BRICK COURSES TYPICALLY, 5 BRICK COURSES MAXIMUM)

Drain Manhole (DMH)

4/11

N.T.S. Source: VHB LD_115

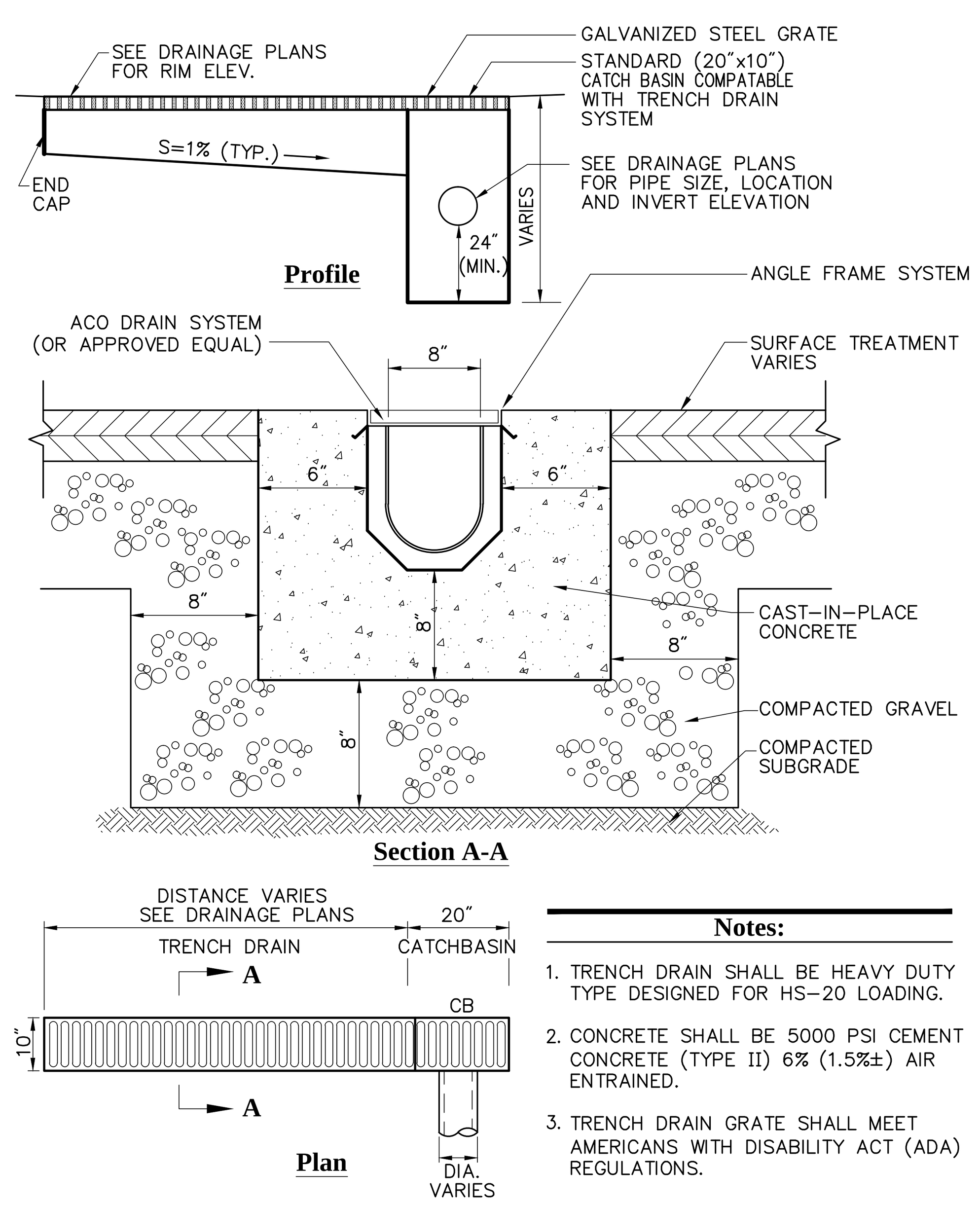

Notes:

1. TRENCH DRAIN SHALL BE HEAVY DUTY TYPE DESIGNED FOR HS-20 LOADING.
2. CONCRETE SHALL BE 5000 PSI CEMENT CONCRETE (TYPE II) 6% (1.5%±) AIR ENTRAINED.
3. TRENCH DRAIN GRATE SHALL MEET AMERICANS WITH DISABILITY ACT (ADA) REGULATIONS.

Trench Drain (Type A)

4/11

N.T.S. Source: VHB LD_190-A

StormTech SC-310 Chamber

Designed to meet the most stringent industry performance standards for superior structural integrity while providing designers with a cost-effective method to save valuable land and protect water resources. The StormTech system is designed primarily to be used under parking lots thus maximizing land usage for commercial and municipal applications.

StormTech — Detention • Retention • Recharge
Subsurface Stormwater Management℠

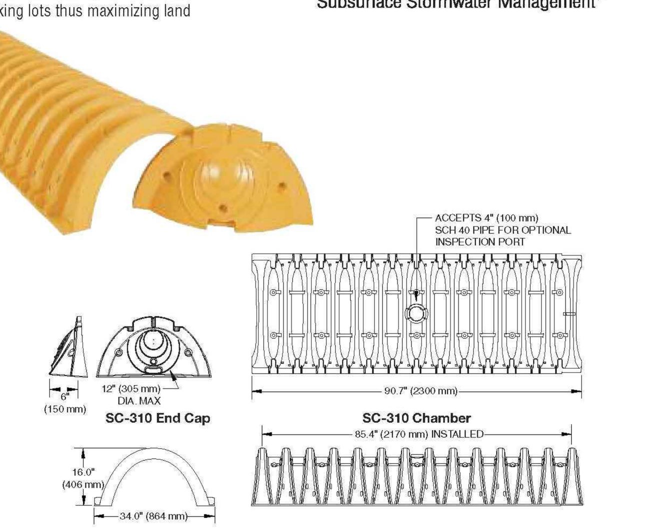

StormTech SC-310 Chamber (not to scale)

Nominal Chamber Specifications

Size (L x W x H)
85.4" x 34.0" x 16.0"
(2170 x 864 x 406 mm)

Chamber Storage
14.7 ft³ (0.42 m³)

Minimum Installed Storage*
31.0 ft³ (0.88 m³)

Weight
37.0 lbs (16.8 kg)

Shipping
41 chambers/pallet
108 end caps/pallet
18 pallets/truck

Typical Cross Section Detail (not to scale)

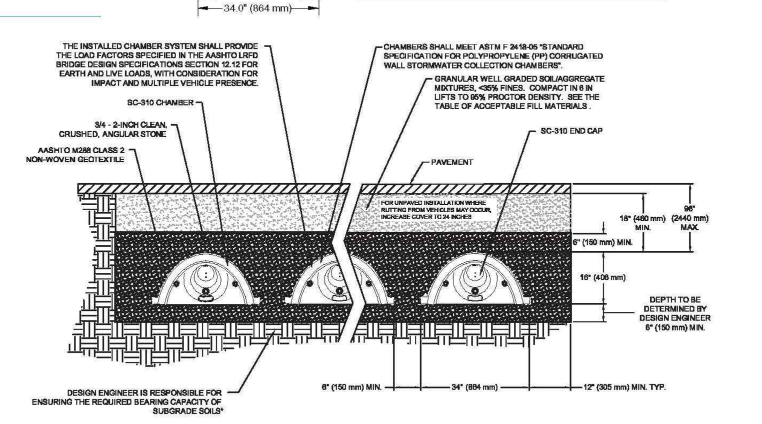

MADE IN THE U.S.A.

THIS CROSS SECTION DETAILS THE REQUIREMENTS NECESSARY TO SATISFY THE LOAD FACTORS SPECIFIED IN THE AASHTO LRFD BRIDGE DESIGN SPECIFICATIONS SECTION 12.12 FOR EARTH AND LIVE LOADS USING STORMTECH CHAMBERS

SC-310 Cumulative Storage Volumes Per Chamber

Assumes 40% Stone Porosity. Calculations are Based Upon a 6" (152 mm) Stone Base Under the Chambers.

Depth of Water in System Inches (mm)	Cumulative Chamber Storage ft³ (m³)	Total System Cumulative Storage ft³ (m³)
28 (711)	↑ 14.70 (0.416)	31.00 (0.878)
27 (686)	14.70 (0.416)	30.21 (0.855)
26 (680)	Stone 14.70 (0.416)	29.42 (0.833)
25 (610)	Cover 14.70 (0.416)	28.63 (0.811)
24 (609)	14.70 (0.416)	27.84 (0.788)
23 (584)	↓ 14.70 (0.416)	27.05 (0.766)
22 (559)	14.70 (0.416)	26.26 (0.748)
21 (533)	14.64 (0.415)	25.43 (0.720)
20 (508)	14.49 (0.410)	24.54 (0.695)
19 (483)	14.22 (0.403)	23.58 (0.668)
18 (457)	13.68 (0.387)	22.47 (0.636)
17 (432)	12.99 (0.368)	21.25 (0.602)
16 (406)	12.17 (0.345)	19.97 (0.566)
15 (381)	11.25 (0.319)	18.62 (0.528)
14 (356)	10.23 (0.290)	17.22 (0.488)
13 (330)	9.15 (0.260)	15.78 (0.447)
12 (305)	7.99 (0.227)	14.29 (0.425)
11 (279)	6.78 (0.192)	12.77 (0.362)
10 (254)	5.51 (0.156)	11.22 (0.318)
9 (229)	4.19 (0.119)	9.64 (0.278)
8 (203)	2.83 (0.081)	8.03 (0.227)
7 (178)	1.43 (0.041)	6.40 (0.181)
6 (152)	↑ 0	4.74 (0.134)
5 (127)	0	3.95 (0.112)
4 (102)	Stone Foundation 0	3.16 (0.090)
3 (76)	0	2.37 (0.067)
2 (51)	0	1.58 (0.046)
1 (25)	↓ 0	0.79 (0.022)

Note: Add 0.79 cu. ft. (0.022 m³) of storage for each additional inch (25 mm) of stone foundation.

Storage Volume Per Chamber

	Bare Chamber Storage	Chamber and Stone Foundation Depth in. (mm)		
	ft³ (m³)	6 (150)	12 (305)	18 (460)
StormTech SC-310	14.7 (0.4)	31.0 (0.9)	35.7 (1.0)	40.4 (1.1)

Note: Storage volumes are in cubic feet per chamber. Assumes 40% porosity for the stone plus the chamber volume.

Amount of Stone Per Chamber

	Stone Foundation Depth		
ENGLISH TONS (CUBIC YARDS)	6"	12"	18"
StormTech SC-310	2.1 (1.5 yd³)	2.7 (1.9 yd³)	3.4 (2.4 yd³)
METRIC KILOGRAMS (METER³)	150 mm	305 mm	460 mm
StormTech SC-310	1830 (1.1 m³)	2490 (1.5 m³)	2990 (1.8 m³)

Note: Assumes 6" (150 mm) of stone above, and between chambers.

Volume of Excavation Per Chamber

	Stone Foundation Depth		
	6" (150 mm)	12" (305 mm)	18" (460 mm)
StormTech SC-310	2.9 (2.2)	3.4 (2.6)	3.8 (2.9)

Note: Volumes are in cubic yards (cubic meters) per chamber. Assumes 6" (150 mm) of separation between chamber rows and 18" (460 mm) of cover. The volume of excavation will vary as the depth of the cover increases.

STANDARD LIMITED WARRANTY OF STORMTECH LLC ("STORMTECH"): PRODUCTS

(A) This Limited Warranty applies solely to the StormTech chambers and endplates manufactured by StormTech and sold to the original purchaser (the "Purchaser"). The chambers and endplates are collectively referred to as the "Products."

(B) The structural integrity of the Products, when installed strictly in accordance with StormTech's written installation instructions at the time of installation, are warranted to the Purchaser against defective materials and workmanship for one (1) year from the date of purchase. Should a defect appear in the Limited Warranty period, the Purchaser shall provide StormTech with written notice of the alleged defect at StormTech's corporate headquarters within ten (10) days of the discovery of the defect. The notice shall describe the alleged defect in reasonable detail. StormTech agrees to supply replacements for those Products determined by StormTech to be defective and covered by this Limited Warranty. The supply of replacement products is the sole remedy of the Purchaser for breaches of this Limited Warranty. StormTech's liability specifically excludes the cost of removal and/or installation of the Products.

(C) THIS LIMITED WARRANTY IS EXCLUSIVE. THERE ARE NO OTHER WARRANTIES WITH RESPECT TO THE PRODUCTS, INCLUDING NO IMPLIED WARRANTIES OF MERCHANT-ABILITY OR OF FITNESS FOR A PARTICULAR PURPOSE.

(D) This Limited Warranty only applies to the Products when the Products are installed in a single layer. UNDER NO CIRCUMSTANCES, SHALL THE PRODUCTS BE INSTALLED IN A MULTI-LAYER CONFIGURATION.

(E) No representative of StormTech has the authority to change this Limited Warranty in any manner or to extend this Limited Warranty. This Limited Warranty does not apply to any person other than to the Purchaser.

(F) Under no circumstances shall StormTech be liable to the Purchaser or to any third party for product liability claims; claims arising from the design, shipment, or installation of the Products, or the cost of other goods or services related to the purchase and installation of the Products. For this Limited Warranty to apply, the Products must be installed in accordance with all site conditions required by state and local codes; all other applicable laws; and StormTech's written installation instructions.

(G) THE LIMITED WARRANTY DOES NOT EXTEND TO INCIDENTAL, CONSEQUENTIAL, SPECIAL OR INDIRECT DAMAGES. STORMTECH SHALL NOT BE LIABLE FOR PENALTIES OR LIQUIDATED DAMAGES, INCLUDING LOSS OF PRODUCTION AND PROFITS; LABOR AND MATERIALS; OVERHEAD COSTS; OR OTHER LOSS OR EXPENSE INCURRED BY THE PURCHASER OR ANY THIRD PARTY. SPECIFICALLY EXCLUDED FROM LIMITED WARRANTY COVERAGE ARE DAMAGE TO THE PRODUCTS ARISING FROM ORDINARY WEAR AND TEAR; ALTERATION, ACCIDENT, MISUSE, ABUSE OR NEGLECT; THE PRODUCTS BEING SUBJECTED TO VEHICLE TRAFFIC OR OTHER CONDITIONS WHICH ARE NOT PERMITTED BY STORMTECH'S WRITTEN SPECIFICATIONS OR INSTALLATION INSTRUCTIONS; FAILURE TO MAINTAIN THE MINIMUM GROUND COVERS SET FORTH IN THE INSTALLATION INSTRUCTIONS; THE PLACEMENT OF IMPROPER MATERIALS INTO THE PRODUCTS; FAILURE OF THE PRODUCTS DUE TO IMPROPER SITING OR IMPROPER SIZING; OR ANY OTHER EVENT NOT CAUSED BY STORMTECH. THIS LIMITED WARRANTY REPRESENTS STORMTECH'S SOLE LIABILITY TO THE PURCHASER FOR CLAIMS RELATED TO THE PRODUCTS, WHETHER THE CLAIM IS BASED UPON CONTRACT, TORT, OR OTHER LEGAL THEORY.

20 Beaver Road, Suite 104 | Wethersfield | Connecticut | 06109
860.529.8188 | 888.892.2694 | fax 866.328.8401 | fax 860-529-8040 | www.stormtech.com

Printed in U.S.A. © Copyright. All rights reserved. StormTech LLC, 2007 Printed on recycled paper S15-090508

StormTech SC-310 Chamber

N.T.S.

VHB
Vanasse Hangen Brustlin, Inc.

Transportation
Land Development
Environmental Services

10 Dorrance Street, Suite 400
Providence, Rhode Island 02903
401.272.8100 • FAX 401.273.9694

No.	Revision	Date	Appvd.

Designed by | Drawn by | Checked by

CAD checked by | Approved by

Scale: Not to Scale | Date: July 1, 2013

Project Title

Proposed Stop & Shop Store #0423

Water Street
Tisbury, Massachusetts

Issued for

Permitting

Not Approved for Construction

Drawing Title

Site Details 3

Drawing Number

C-8

Sheet 8 of 9

Project Number
72451.00

S:\72451.00\CAD\LD\PLANSET\72451-DT

Saved Friday, June 28, 2013 11:45:56 AM GBURKE Plotted Friday, June 28, 2013 11:44:23 PM Burke, Genevieve

VHB

Vanasse Hangen Brustlin, Inc.

Transportation
Land Development
Environmental Services

10 Dorrance Street, Suite 400
Providence, Rhode Island 02903
401.272.8100 • FAX 401.273.9694

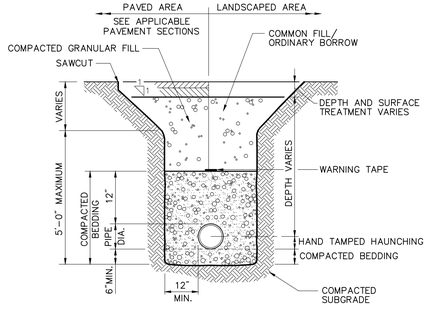

Notes:

1. WHERE UTILITY TRENCHES ARE CONSTRUCTED THROUGH DETENTION BASIN BERMS OR OTHER SUCH SPECIAL SECTIONS, PLACE TRENCH BACKFILL WITH MATERIALS SIMILAR TO THE SPECIAL SECTION REQUIREMENTS.
2. USE METALLIC TRACING/WARNING TAPE OVER ALL PIPES.

Utility Trench

8/11

N.T.S. Source: VHB LD_300

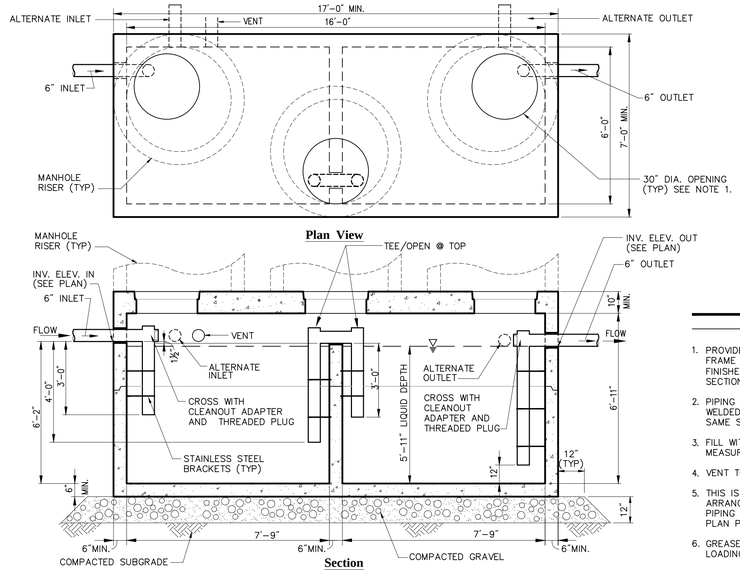

Notes:

1. PROVIDE EACH OPENING WITH A 30" DIA. CAST IRON FRAME AND COVER OVER CROSSES RAISED TO FINISHED GRADE WITH 48" DIA. MANHOLE RISER SECTIONS.
2. PIPING SHALL BE SCH 40 PVC WITH SOLVENT WELDED JOINTS. INTERNAL PIPE DIAMETER SHALL BE SAME SIZE AS OUTLET PIPE.
3. FILL WITH WATER BEFORE REMOVAL OF DEWATERING MEASURES.
4. VENT TO SUITABLE LOCATION.
5. THIS IS A STANDARD DETAIL – ORIENTATION AND ARRANGEMENT OF INLETS, OUTLETS AND INTERIOR PIPING SHALL BE IN ACCORDANCE WITH THE UTILITY PLAN PROVIDED.
6. GREASE TRAP AND MANHOLES TO MEET HS-20 LOADING.

4,000 Gallon Precast Concrete Grease Trap (GT) - Type 'B'

6/08

N.T.S. Source: VHB LD_213s

Table Of Dimensions

BENDS	B	C	D	E	F	BENDS	B	C	D	E	F
6" 11 1/4°	8"	15"	12"	24"	12"	6" 45°	8"	30"	12"	24"	14"
6" 22 1/2°	-	19"	-	-	13"	6" 90°	-	30"	-	-	27"
8" 11 1/4°	-	20"	-	-	12"	8" 45°	-	30"	-	-	24"
8" 22 1/2°	-	22"	-	-	17"	8" 90°	-	38"	-	-	36"
12" 11 1/4°	-	30"	-	-	15"	12" 45°	-	40"	-	-	40"
12" 22 1/2°	-	35"	-	-	25"	12" 90°	-	60"	-	-	52"

Bends

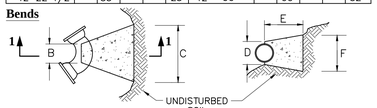

Plan Section 1-1

Table Of Dimensions

TEES	G	H	I	J	TEES	G	H	I	J
6"x 6"x 6"	12"	24"	24"	18"	12"x 12"x 6"	12"	24"	24"	18"
8"x 8"x 6"	-	-	-	-	12"x 12"x 8"	-	-	-	24"
8"x 8"x 8"	-	-	-	24"	12"x 12"x 12"	-	36"	-	36"

Tees

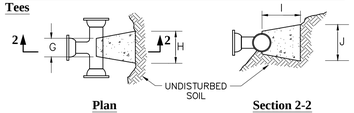

Plan Section 2-2

Notes:

1. PROVIDE BLOCKS FOR TAPPING SLEEVES, DEAD ENDS, GATE VALVES, AND VERTICAL BENDS (SAME SIZE AS REQUIRED FOR TEES). PROVIDE ANCHOR RODS AT VERTICAL BENDS AND GATE VALVES.
2. CONCRETE SHALL NOT BE PLACED AGAINST PIPE BEYOND FITTING.
3. CONCRETE SHALL BE 3000 PSI-TYPE I.

Concrete Thrust Block

10/10

N.T.S. Source: VHB LD_260

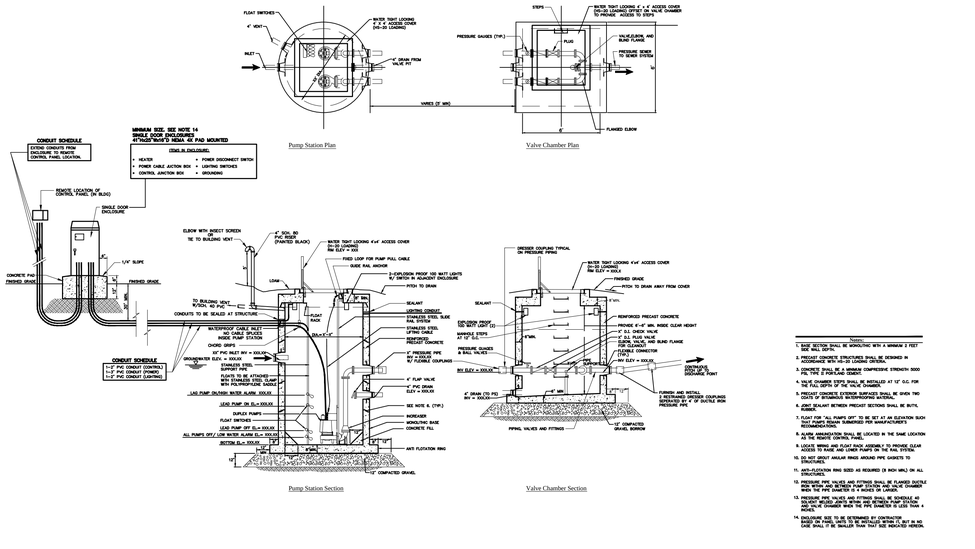

Notes:

1. BASE SECTION SHALL BE MONOLITHIC WITH A MINIMUM 2 FEET SIDE WALL DEPTH.
2. PRECAST CONCRETE STRUCTURES SHALL BE DESIGNED IN ACCORDANCE WITH HS-20 LOADING CRITERIA.
3. CONCRETE SHALL BE A MINIMUM COMPRESSIVE STRENGTH 5000 PSI, TYPE II PORTLAND CEMENT.
4. VALVE CHAMBER STEPS SHALL BE INSTALLED AT 12" O.C. FOR THE FULL DEPTH OF THE STRUCTURE.
5. PRECAST CONCRETE EXTERIOR SURFACES SHALL BE GIVEN TWO COATS OF BITUMINOUS WATERPROOFING MATERIAL.
6. JOINT SEALANT BETWEEN PRECAST SECTIONS SHALL BE BUTYL RUBBER.
7. FLOAT FOR "ALL PUMPS OFF" TO BE SET AT AN ELEVATION SUCH THAT PUMPS REMAIN SUBMERGED PER MANUFACTURER'S RECOMMENDATIONS.
8. ALARM ANNUNCIATION SHALL BE LOCATED IN THE SAME LOCATION AS THE REMOTE CONTROL PANEL.
9. ALL PIPING AND FLOAT RACK ASSEMBLY TO PROVIDE CLEAR ACCESS TO VALVE AND LOWER PUMPS ON THE FAIL SYSTEM.
10. DO NOT GROUT ANGULAR RINGS AROUND PIPE GASKETS TO STRUCTURES.
11. ANTI-FLOTATION RING SIZED AS REQUIRED (8 INCH MIN.) ON ALL STRUCTURES.
12. PRESSURE PIPE VALVES AND FITTINGS SHALL BE FLANGED DUCTILE IRON CLASS 53 MINIMUM WITH RESTRAINED JOINTS ONLY IN CHAMBER WHEN THE PIPE DIAMETER IS 4" INCHES OR LARGER.
13. PRESSURE PIPE VALVES AND FITTINGS SHALL BE SCHEDULE 40 STEEL WITH FLANGED JOINTS ONLY IN CHAMBER WHEN THE PIPE DIAMETER IS LESS THAN 4 INCHES.
14. ENCLOSURE SIZE TO BE DETERMINED BY CONTRACTOR BASED ON PANEL SIZES. TO BE INSTALLED WITHIN 5' BUT IN NO CASE SHALL IT BE INSTALLED MORE THAT SIZE INDICATED HEREON.

Sewage Pump Station and Valve Chamber (Duplex, Submersible)

6/08

N.T.S. Source: VHB LD-225

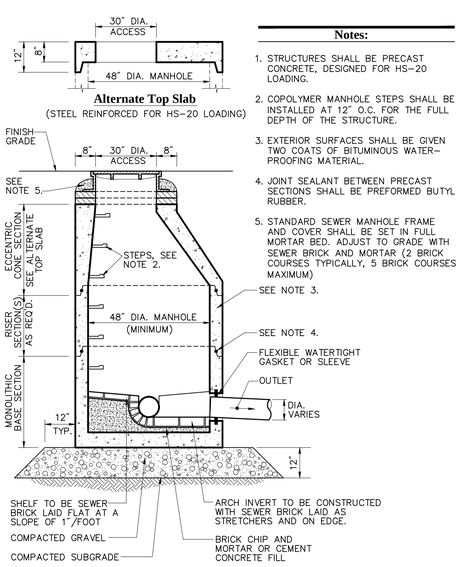

Notes:

1. STRUCTURES SHALL BE PRECAST CONCRETE, DESIGNED FOR HS-20 LOADING.
2. COPOLYMER MANHOLE STEPS SHALL BE INSTALLED AT 12" O.C. FOR THE FULL DEPTH OF THE STRUCTURE.
3. EXTERIOR SURFACES SHALL BE GIVEN TWO COATS OF BITUMINOUS WATER-PROOFING MATERIAL.
4. JOINT SEALANT BETWEEN PRECAST SECTIONS SHALL BE PREFORMED BUTYL RUBBER.
5. STANDARD SEWER MANHOLE FRAME AND COVER SHALL BE SET IN FULL MORTAR BED. ADJUST TO GRADE WITH SEWER BRICK AND MORTAR (2 BRICK COURSES TYPICALLY, 5 BRICK COURSES MAXIMUM)

Sanitary Sewer Manhole (SMH)

6/08

N.T.S. Source: VHB LD_200

No.	Revision	Date	Appvd.

Designed by | Drawn by | Checked by

CAD checked by | Approved by

Scale: Not to Scale | Date: July 1, 2013

Project Title

Proposed Stop & Shop Store #0423

Water Street
Tisbury, Massachusetts

Issued for

Permitting

Not Approved for Construction

Drawing Title

Site Details 4

Drawing Number

C-9

Sheet 9 of 9

Project Number
72451.00

72451-DT.DWG

\\RI-DATA\PROJECTS\72451.00\CAD\LD\PLANSET\72451-LA

Saved Friday, June 28, 2013 11:05:38 AM DWHITE Plotted Friday, June 28, 2013 11:06:52 AM White, Dave

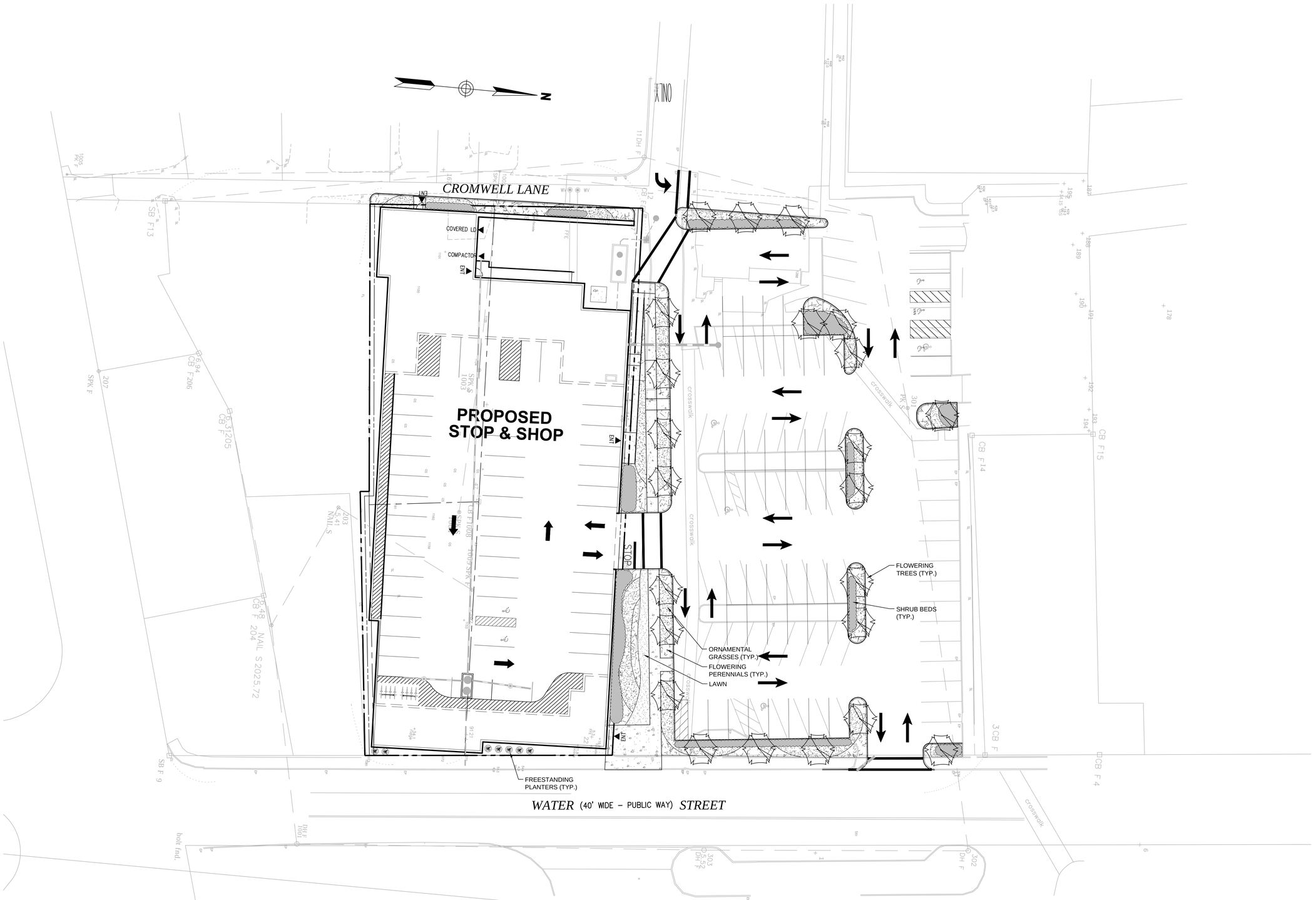

VHB
Vanasse Hangen Brustlin, Inc.

Transportation
Land Development
Environmental Services

10 Dorrance Street, Suite 400
Providence, Rhode Island 02903
401.272.8100 • FAX 401.273.9694

No.	Revision	Date	Appvd.

Designed by	Drawn by	Checked by
CAD checked by		Approved by
Scale 1"=10'		Date July 1, 2013

Project Title

Proposed Stop & Shop Store #0423

Water Street
Tisbury, Massachusetts

Issued for

Permitting

Not Approved for Construction

Drawing Title

Planting Plan

Drawing Number

L-1

Sheet of 8

Project Number
72451.00

72451-LA.DWG

Notes:
1. FEMA note: Based on the current FEMA FIRM maps, dated July 6, 2010, the 100 year storm line in this area is Zone AE elevation 7 based on NAVD88 datum. This survey is based on NGVD29 datum. Based on NGVD29 datum, the 100 year storm elevation is 8.
2. Underground utilities were delineated by field location of observable utlity structures and by consulting with Fred Lapiana, Tisbury DPW director and Tim Sylvia of the Tisbury Water Works. DigSafe was also notified.

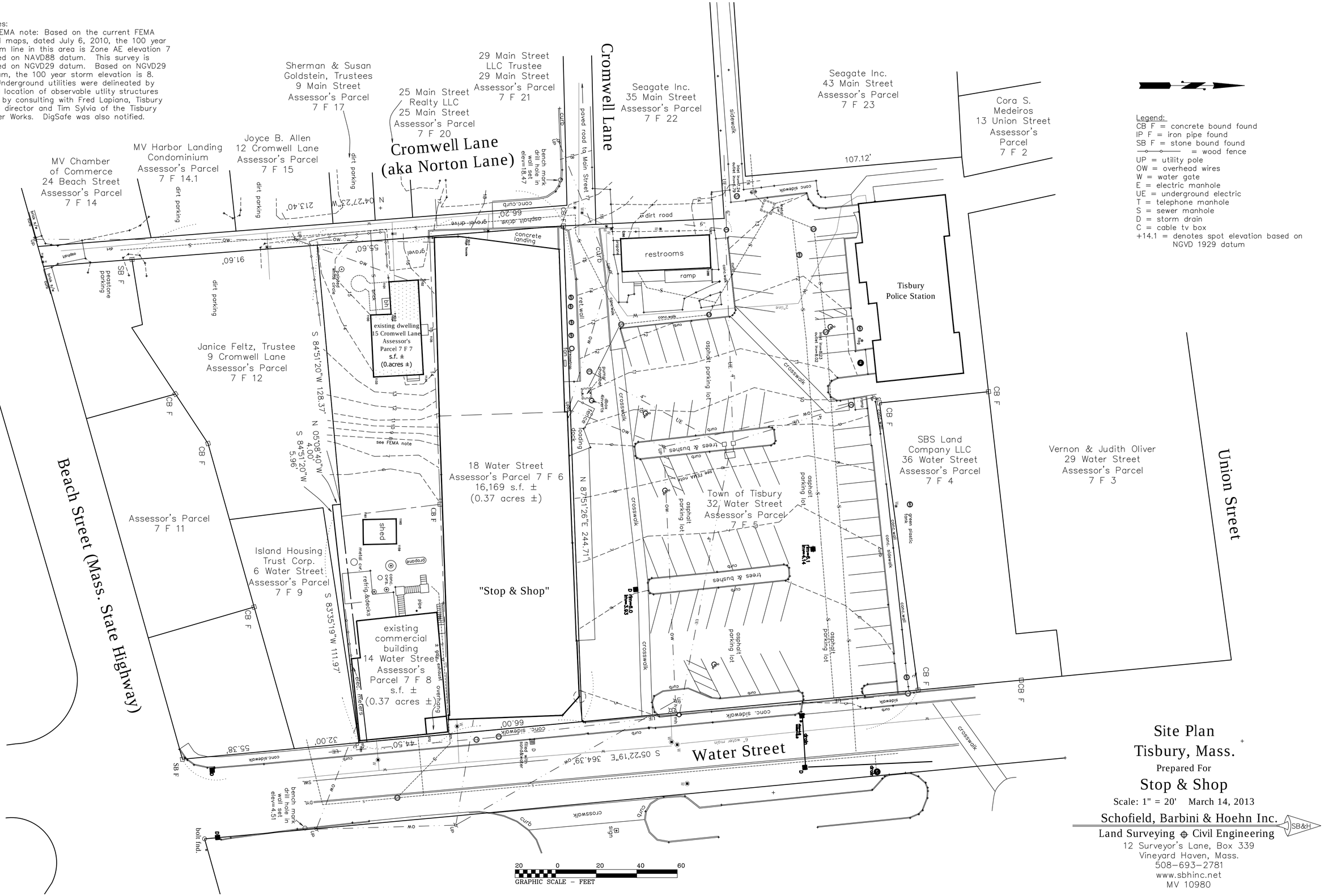

Legend:
CB F = concrete bound found
IP F = iron pipe found
SB F = stone bound found
= wood fence
UP = utility pole
OW = overhead wires
W = water gate
E = electric manhole
UE = underground electric
T = telephone manhole
S = sewer manhole
D = storm drain
C = cable tv box
+14.1 = denotes spot elevation based on NGVD 1929 datum

Site Plan
Tisbury, Mass.

Prepared For

Stop & Shop

Scale: 1" = 20' March 14, 2013

Schofield, Barbini & Hoehn Inc.
Land Surveying ⊕ Civil Engineering
12 Surveyor's Lane, Box 339
Vineyard Haven, Mass.
508-693-2781
www.sbhinc.net
MV 10980